From the holdings of the Department of Special Collections , Princeton University Library, Princeton, NJ

These documents are either in the public domain, or can only be used for educational and research purposes (Fair use) as per U.S. Copyright law (text below). By accessing this file, all users agree that their use falls in the public domain or within fair use as defined by the copyrightlaw. We do not charge any permission or usage fees for the publication of images of material inour collections, including those provided by Princeton University Library, via our website, catalog, or directly from staff.For more information regarding copyright, credit, and citation please review the information onthe Copyright, Credit and Citation Guidelines page of our website.
https://library.princeton.edu/special-collections/policies/copyright-credit-and-citation-guidelines. If you have any questions, including how to order higher-quality images from the collection, contact Special Collections Public Services via our Ask Us! Form. https://library.princeton.edu/special-collections/ask-us

---

Doctoral Dissertations, 2011-2026 Mathematics

2014

On Closed Hyperbolic 3-manifolds and Pseudo-Anosov Maps

Sun, Hongbin

Princeton, NJ : Princeton University

---

http://arks.princeton.edu/ark:/88435/dsp01vq27zn569

U.S. Copyright law: The copyright law of the United States (Title 17, §108, United States Code) governs the making of photocopies or other reproductions of copyrighted material. Under certain conditions specified in the law, libraries and archives are authorized to furnish a photocopy or other reproduction. One of these specified conditions is that the photocopy or reproduction is not to be used for any purpose other than private study, scholarship, or research. If a user makes a request for, or later uses, a photocopy or reproduction for purposes in excess of fair use that user may be liable for copyright infringement. This institution reserves the right to refuse to accept a copying order if, in its judgment, fulfillment of the order would involve a violation of copyright law. https://www.copyright.gov/title17/title17.pdf

On Closed Hyperbolic 3-manifolds and Pseudo-Anosov Maps

Hongbin Sun

A Dissertation
Presented to the Faculty
of Princeton University
in Candidacy for the Degree
of Doctor of Philosophy

Recommended for Acceptance
by the Department of
Mathematics
Adviser: David Gabai

June 2014

© Copyright by Hongbin Sun, 2014.

All rights reserved.

Abstract

This dissertation consists of two different research topics.

The first topic is a study on virtual properties of closed hyperbolic 3-manifolds. By applying Kahn-Markovic's and Liu-Markovic's construction of immersed almost totally geodesic surfaces in closed hyperbolic 3-manifolds, we construct various interesting immersed π_1-injective 2-complexes in closed hyperbolic 3-manifolds. By using these immersed π_1-injective 2-complexes and Agol's result that the groups of hyperbolic 3-manifolds are LERF, we show two results on virtual properties of closed hyperbolic 3-manifolds. The first results is, any finite abelian group is a direct summand of the virtual homology of any closed hyperbolic 3-manifold. The second result is, any closed oriented hyperbolic 3-manifold virtually 2-dominates any closed oriented 3-manifold.

The second topic is a study of pseudo-Anosov maps by using 3-manifold topology. For a hyperbolic surface bundle over the circle, we study the dilatation function defined on Thurston's fibered cone containing the given fibered structure. By using coordinates of the minimal point of the restriction of this dilatation function on the fibered face, we define an invariant of pseudo-Anosov maps, which is a $\mathbb{Q}$-submodule of $\mathbb{R}$. We will develop a few nice properties of this invariant, and give a few examples to show that this invariant can be nontrivial, i.e. the minimal point need not be a rational point (actually transcendental in this case).

Acknowledgements

At first, I am very grateful to my advisor David Gabai for his comprehensive guidance, insightful suggestions and continuous encouragements. What I have learned from him, both knowledge in mathematics and the philosophy of working on mathematics, will be extremely helpful in my mathematical career.

I would like to thank Shicheng Wang for introducing me the field of 3-manifold topology, before I came to Princeton University. I also thanks Peking University, especially Shicheng Wang and Jiajun Wang for warmly hosting my annual visiting.

Thanks to my best academic friend Yi Liu for many invaluable conversations, sharing his mathematical knowledge and profound idea with me.

I am grateful to Ian Agol, Sergio Fenley, Stefan Friedl, Dave Futer, Cameron Gordon, Eriko Hironaka, Jeremy Kahn, Tao Li, Feng Luo, Vlad Markovic, Curtis McMullen, Yi Ni, Robert Penner, Alan Reid and Sucharit Sarkar for being interested in my work and many fruitful conversations.

I want to thank my friends: Hyungryul Baik, Will Cavendish, Hao Huang, Sebastian Hurtado, Lin Lin, Liangming Shen, Conan Wu, Guangbo Xu, Shiwu Yang, Tian Yang, Mehdi Yazdi and Ruobing Zhang for sharing their time with me. Thanks to our graduate program administrator Jill LeClair for her help throughout my five years at Princeton.

There are still many people who have helped me so much during my life, but I can not list all of their names here.

Finally, I want to thank my parents for their continuous supporting and encouragements, and thank my wife Siyu Yang for her love and sharing her life with me.

Contents

Abstract iii

Acknowledgements iv

I Virtual properties of closed hyperbolic 3-manifolds 1

1 Introduction 2

1.1 Background 2

1.2 Main results 3

2 Review of Kahn-Markovic's and Liu-Markovic's works 7

2.1 The surface subgroup theorem 7

2.2 The Ehrenpreis conjecture 11

2.3 Construction of almost totally geodesic subsurfaces with boundary . . 13

3 Existence of virtual torsion 18

3.1 Construction of an immersed π_1-injective 2-complex 18

3.2 Finite cyclic subgroups in virtual homology 21

3.3 Finite Abelian subgroups in virtual homology 26

4 Existence of virtual domination 28

4.1 Sketch of the proof 28

4.2 Orbifold handle structures of M_0 and N 30

4.3 Construction of an immersed π_1-injective 2-complex 37
4.4 Construction of domination 49

5 The π_1-injectivity of $X_p \looparrowright M$ 54

5.1 A general formulation of the π_1-injectivity result 54
5.2 A piecewise linear map is a quasi-isometry 56
5.3 Estimations of angle change 64
5.4 Proof of Theorem 5.1.4 73

6 The π_1-injectivity of $Z \looparrowright M$ 76

6.1 The modified path and estimations of the standard model 77
6.2 Estimations of the deformations of i_0 82

7 Further questions and directions 101

7.1 Further questions 101
7.2 A relation with pseudo-Anosov maps 102

II A transcendental invariant of pseudo-Anosov maps 106

8 Introduction 107

8.1 Background 107
8.2 Main results 109

9 McMullen's work on the Teichmüller Polynomial 113

10 Properties of the invariant $A(S, \phi)$ 116

10.1 A covering property of $A(S, \phi)$ 116
10.2 Symmetry implies rationality 118
10.3 Irrationality implies transcendentality 120

11 Penner's construction and rational minimal points **123**

11.1 Penner's construction and a computation of the dilatation function . 123

11.2 Rational minimal points from Penner's construction 130

12 Examples of irrational minimal points **134**

12.1 Drilling and branched covering theorems 134

12.1.1 The drilling theorem 134

12.1.2 The branched covering theorem 139

12.1.3 Existence of infinitely many closed orbit classes 141

12.2 Explicit examples of irrational minimal points 145

12.2.1 An explicit example and its closed orbits 145

12.2.2 An alternative method to deduce irrationality 150

12.2.3 An irrational example from Penner's construction 154

12.3 Various other examples with irrational minimal points 157

12.3.1 Other examples 157

12.3.2 $A(S, \phi)$ is not defined for 3-manifolds 158

13 Further questions **162**

Bibliography **164**

Part I

Virtual properties of closed hyperbolic 3-manifolds

Chapter 1

Introduction

1.1 Background

Traditionally, embedded essential codimension-1 objects in 3-manifolds, e.g. incompressible surfaces, taut foliations, essential laminations, are very important and interesting objects in 3-manifold topology. There are various methods to construct such embedded essential codimension-1 objects, and most of the constructions use topological methods.

In [20], Kahn and Markovic used hyperbolic geometry and dynamical system to show the following Surface Subgroup Theorem: For any closed hyperbolic 3-manifold M, there exists a closed hyperbolic surface S, such that there is a π_1-injective almost totally geodesic immersion $S \looparrowright M$. Building on Wise's work on geometric group theory ([46]), Agol showed that the groups of hyperbolic 3-manifolds are virtually special and LERF ([3]). Agol's result admits us to find a finite cover of M, such that S lifts to an embedded incompressible surface, which solves Thurston's Virtual Haken Conjecture ([42]). Actually, it is the Surface Subgroup Theorem that admits Wise's machine on geometric group theory ([46]) available for studying general closed hyperbolic 3-manifolds.

Recently, in [25], Liu and Markovic gave a refined version of Kahn and Markovic's theory. Given a link L in a closed hyperbolic 3-manifold M, such that each component of L is non-contractible in M, then for any $\alpha \in H_2(M, L; \mathbb{Z})$, they constructed an immersed connected almost totally geodesic subsurface (possibly with boundary) in M which realizes a nonzero integer multiple of α. In particular, for any "nice" nullhomologus oriented link L in a closed hyperbolic 3-manifold M, they showed that a nonzero integer multiple (actually at most two copies) of L bound an immersed almost totally geodesic subsurface in M.

One interesting idea is, given these Kahn-Markovic and Liu-Markovic subsurfaces in a closed hyperbolic 3-manifold M, one can try to construct various immersed π_1-injective 2-complexes $f : X \looparrowright M$ with nice geometrical and topological properties. Since groups of hyperbolic 3-manifolds are LERF, there exists a finite cover M' of M, such that X lifts to an embedded 2-complex in M'. Then a geometric neighborhood of the embedded 2-complex gives some topological information of M'.

In the first part of this thesis, we will apply the above idea to prove two results on virtual properties of closed hyperbolic 3-manifolds.

1.2 Main results

In the survey paper [4], Aschenbrenner, Friedl and Wilton asked the following question, which concerns the virtual homological torsion of hyperbolic 3-manifolds.

Question 1.2.1. *Let M be a hyperbolic 3-manifold with finite volume, does M admits a finite cover N such that $Tor(H_1(N; \mathbb{Z})) \neq 0$?*

This question is inspired by the following question asked by Lück, which tries to approximate the L^2-torsion of hyperbolic 3-manifolds by topological invariants of its finite covers (see [27] Question 13.73, [28] Question 1.12 and [5]).

Question 1.2.2. *Let M be a hyperbolic 3-manifold with finite volume, does there exist a cofinal tower of finite regular covers $\cdots \to M_n \to \cdots \to M_1 \to M$, such that*

$$\lim_{n\to\infty} \frac{\ln |Tor(H_1(M_n;\mathbb{Z}))|}{[\pi_1(M) : \pi_1(M_n)]} = \frac{Vol(M)}{6\pi}?$$

The first result we will show implies that, any closed hyperbolic 3-manifold contains any finite abelian group in its virtual homological torsion, and answers Question 1.2.1 for closed hyperbolic 3-manifolds.

Theorem 1.2.3. *For any finite abelian group A, and any closed hyperbolic 3-manifold M, there exists a finite cover M' of M, such that A is a direct summand of $Tor(H_1(M';\mathbb{Z}))$.*

Since Agol showed that hyperbolic 3-manifolds have virtual infinite first betti number ([3]) and the first betti number does not decrease under taking finite cover, we have the following immediate corollary.

Corollary 1.2.4. *For any finitely generated abelian group A, and any closed hyperbolic 3-manifold M, there exists a finite cover M' of M, such that A is a direct summand of $H_1(M';\mathbb{Z})$.*

The second result we will show claims that any closed oriented hyperbolic 3-manifold virtually 2-dominates any closed oriented 3-manifold.

Theorem 1.2.5. *For any closed oriented hyperbolic 3-manifold M, and any closed oriented 3-manifold N, M admits a finite cover M', such that there exists a degree-2 map $f : M' \to N$, i.e. M virtually 2-dominates N.*

Theorem 1.2.5 answers a question asked by Agol: whether any closed hyperbolic 3-manifold virtually dominates any closed 3-manifold. This question was a possible approach to prove the Virtual Haken Conjecture. In some sense, the existence of a

nonzero degree map from one 3-manifold M to another 3-manifold N implies that M is (topologically) more complicated than N. So Theorem 1.2.5 implies that any closed hyperbolic 3-manifold is virtually more complicated than any closed 3-manifold. For more information about the history, results and questions on non-zero degree maps between 3-manifolds, see the survey paper [45].

Since closed hyperbolic 3-manifolds have virtually positive b_1 ([3]), we can suppose that M satisfies $b_1(M) > 0$, then we have the following immediate corollary.

Corollary 1.2.6. *For any even number $2d$, any closed oriented hyperbolic 3-manifold M, and any closed oriented 3-manifold N, M admits a finite cover M', such that there exists a degree-$2d$ map $g : M' \to N$, i.e. M virtually $2d$-dominates N.*

Theorem 1.2.5 also answers Question 8.2 in [11] for closed hyperbolic 3-manifolds, by taking N to be any closed 3-manifold which support the $\widetilde{PSL_2(\mathbb{R})}$ geometry.

Corollary 1.2.7. *For any closed hyperbolic 3-manifold M, M admits a finite cover M', such that M' has positive Seifert volume ($Iso_e\widetilde{SL_2(\mathbb{R})}$-representation volume).*

Remark 1.2.8. *If we take N to be connected sum of lens spaces, then Theorem 1.2.5 implies a weaker version of Theorem 1.2.3: for any closed hyperbolic 3-manifold M, and any finite abelian group A, M admits a finite cover M', such that A is embedded into $Tor(H_1(N;\mathbb{Z}))$.*

Note that although we take various different finite covers of M in the previous a few results, we always use M' to denote these finite covers, when it does not cause any confusion.

In Chapter 2, we will give a quick review of the results in [20], [19] and [25], which provide us the main tools for our proof. In Chapter 3 and 4, we will give the topological part of the proof of Theorem 1.2.3 and 1.2.5 respectively. The most important step in both of these proofs is to construct an immersed π_1-injective 2-complex in any closed hyperbolic 3-manifold, which carries some topological information. The proof

of the π_1-injectivity of the immersed π_1-injective 2-complexes will be given in Chapter 5 and Chapter 6. In Chapter 7, we will ask a few related questions, and point out a connection between Theorem 1.2.5 and a conjecture of Koberda ([23]).

Chapter 2

Review of Kahn-Markovic's and Liu-Markovic's works

In this chapter, we give a quick review of Kahn-Markovic's and Liu-Markovic's works on constructing almost totally geodesic subsurfaces in closed hyperbolic 3-manifolds. All the material in this chapter can be found in [20], [19] and [25], and we only state those results that are necessary for our applications.

2.1 The surface subgroup theorem

In [20], Kahn and Markovic proved the following Surface Subgroup Theorem, which is the first step to prove Thurston's Virtual Haken and Virtual Fibered Conjectures. (The conjectures were raised in [42], and settled in [3]).

Theorem 2.1.1 ([20])**.** *For any closed hyperbolic* 3*-manifold* M*, there exists an immersed closed hyperbolic surface* $f : S \looparrowright M$*, such that* $f_* : \pi_1(S) \to \pi_1(M)$ *is an injective map.*

Actually, the surfaces constructed in Theorem 2.1.1 are almost totally geodesic surfaces, which are constructed by pasting oriented *good pants* together along oriented

good curves in an almost totally geodesic way. In the following, we will describe Kahn and Markovic's construction with more details.

At first, we need to give some geometric definitions before describing their construction.

Given an oriented geodesic arc α in a closed hyperbolic 3-manifold with its initial point p and terminal point q, for two unit vectors $\vec{v}$ and $\vec{w}$ at p and q respectively which are normal to α, we define $\mathbf{d}_\alpha(\vec{v},\vec{w})$ in the following way. Let $\vec{v}'$ be the parallel transportation of $\vec{v}$ to q along α, $\theta \in \mathbb{R}/2\pi\mathbb{Z}$ be the oriented angle between $\vec{v}'$ and $\vec{w}$ (with respect to the orientation of α), and the length of α be $l > 0$, then the complex distance between $\vec{v}$ and $\vec{w}$ along α is defined to be $\mathbf{d}_\alpha(\vec{v},\vec{w}) = l + \theta i$.

For an oriented closed geodesic γ in a hyperbolic 3-manifold, we define its complex length in a similar way. Choose an arbitrary point p on γ and choose a unit tangent vector $\vec{v}$ at p and normal with γ, then we can think γ as an oriented geodesic arc from p to p. Then the complex length of γ is defined to be $\mathbf{l}(\gamma) = \mathbf{d}_\gamma(\vec{v},\vec{v})$. This complex length not only measures the length of γ in the usual sense, but also measures the rotation angle of the corresponding hyperbolic isometry. Note that the complex length of an oriented closed geodesic does not depend on its orientation and the choice we made.

In the following, we will use Π^0 to denote the oriented pair of pants.

Definition 2.1.2. *For a closed hyperbolic 3-manifold M, a map $f : \Pi^0 \to M$ is called a skew pair of pants if $f_* : \pi_1(\Pi^0) \to \pi_1(M)$ is injective, and $f(\partial\Pi^0)$ is a union of three closed geodesics.*

We will always think about homotopic skew pair of pants as the same object, and we will use Π to denote a skew pair of pants $f : \Pi^0 \to M$ when it does not cause any confusion.

Let C_1, C_2 and C_3 be the three oriented boundary components of Π^0, γ_1, γ_2 and γ_3 be the three oriented closed geodesics $f(C_1)$, $f(C_2)$ and $f(C_3)$ respectively. Let

a_i be the simple arc in Π^0 which connects C_{i-1} and C_{i+1}, such that a_1, a_2, and a_3 are disjoint with each other on Π^0. Then we can assume that $f(a_i)$ is a geodesic arc perpendicular with both γ_{i-1} and γ_{i+1}, and denote $f(a_i)$ by η_i.

Now we fix γ_i, and give orientations for η_{i-1} and η_{i+1} such that they are both pointing away from γ_i. Then η_{i-1} and η_{i+1} divide γ_i to two oriented geodesic arcs γ_i^1 and γ_i^2, such that the orientation on γ_i^1 goes from $\eta_{i-1} \cap \gamma_i$ to $\eta_{i+1} \cap \gamma_i$. Let $\vec{v}_{i-1}$ and $\vec{v}_{i+1}$ be the tangent vectors of η_{i-1} and η_{i+1} at $\eta_{i-1} \cap \gamma_i$ and $\eta_{i+1} \cap \gamma_i$ respectively, then the pair of vectors $(\vec{v}_{i-1}, \vec{v}_{i+1})$ are called the *pair of feet* of Π on γ_i. The hyperbolic geometry of right-angled hexagons in $\mathbb{H}^3$ implies that $\mathbf{d}_{\gamma_i^1}(\vec{v}_{i-1}, \vec{v}_{i+1}) = \mathbf{d}_{\gamma_i^2}(\vec{v}_{i+1}, \vec{v}_{i-1})$. Now we can define the half length of γ_i with respect to Π as the following:

$$\mathbf{hl}_\Pi(C_i) = \mathbf{d}_{\gamma_i^1}(\eta_{i-1}, \eta_{i+1}) = \mathbf{d}_{\gamma_i^2}(\eta_{i+1}, \eta_{i-1}).$$

Now we are ready to define *good curves* and *good pants*.

Definition 2.1.3. *Fix a small number $\epsilon > 0$ and a large number $R > 0$, for an oriented closed geodesic γ in M, we say γ is an (R, ϵ)-good curve if $|\mathbf{l}(\gamma) - R| < 2\epsilon$. The set of (R, ϵ)-good curves is denoted by $\mathbf{\Gamma}_{R,\epsilon}$.*

For a skew pair of pants $f : \Pi^0 \to M$, we say it is an (R, ϵ)-good pants if $|\mathbf{hl}_\Pi(C) - \frac{R}{2}| < \epsilon$ holds for all the three cuffs (boundary components) of Π^0. The set of (R, ϵ)-good pants is denoted by $\mathbf{\Pi}_{R,\epsilon}$.

In the following part of this thesis, we will work with a very small positive number $\epsilon > 0$ and a very large number $R > 0$, and the precise value of ϵ and R will be determined later. When R and ϵ have been fixed, we will only talk about good curves and good pants, instead of (R, ϵ)-good curves and (R, ϵ)-good pants. Note that the oriented boundary components of (R, ϵ)-good pants are always (R, ϵ)-good curves.

For a good curve $\gamma \in \mathbf{\Gamma}_{R,\epsilon}$, the normal bundle $N^1(\gamma)$ of γ is naturally identified with $\mathbb{C}/\mathbf{l}(\gamma)\mathbb{Z} + 2\pi i\mathbb{Z}$. If γ is the oriented boundary of a good pants Π, we can define

the half normal bundle by $N^1(\sqrt{\gamma}) = \mathbb{C}/\mathbf{hl}_\Pi(\gamma)\mathbb{Z} + 2\pi i\mathbb{Z}$. Then the pair of feet of Π on γ are identified to one point in $N^1(\sqrt{\gamma})$, which is called the *foot* of Π on γ, and denoted by $foot_\gamma(\Pi)$.

Now we are ready to talk about maps from surfaces to closed hyperbolic 3-manifolds. Suppose S is a compact oriented surface (possibly with boundary) with negative Euler characteristic, equipped with a pants decomposition $\mathcal{C}$ (boundary components of S are also included in $\mathcal{C}$). Then the closure of each component of $S \setminus \mathcal{C}$ is an oriented pair of pants, and we call such a component a pants in S.

Definition 2.1.4. *A map $f : S \to M$ is called viable if the following conditions holds.*

- *For each pants Π in S, $f|_\Pi : \Pi \to M$ is a skew pair of pants.*
- *For any two pants Π and Π' in S sharing a curve $C \in \mathcal{C}$, $\mathbf{hl}_\Pi(C) = \mathbf{hl}_{\Pi'}(C)$ holds.*

So for a viable map $f : S \to M$, we will use $\mathbf{hl}(C)$ to denote $\mathbf{hl}_\Pi(C)$ for each $C \in \mathcal{C}$. For two pants Π and Π' in S sharing a curve $C \in \mathcal{C}$, we give C an orientation such that Π lies to the left of C on S, and Π' lies to the right. Let $\gamma = f(C)$, and γ' be the same closed geodesic with the opposite orientation, then we can compare the feet of Π and Π' on $N^1(\sqrt{\gamma})$ by the following shearing parameter:

$$s(C) = foot_\gamma(f|_\Pi) - foot_{\gamma'}(f|_{\Pi'}) - \pi i \in N^1(\sqrt{\gamma}) = \mathbb{C}/\mathbf{hl}(C)\mathbb{Z} + 2\pi i\mathbb{Z}.$$

Now we can precisely describe the immersed almost totally geodesic surface constructed in the proof of Theorem 2.1.1. The closed oriented surface S is equipped with a pants decomposition $\mathcal{C}$, and the map $f : S \looparrowright M$ satisfies the following equality for any $C \in \mathcal{C}$:

$$\begin{cases} |\mathbf{hl}(C) - \frac{R}{2}| < \epsilon, \\ |s(C) - 1| < \frac{\epsilon}{R}. \end{cases}$$

We will call a viable map $f : S \looparrowright M$ an (R, ϵ)-*almost totally geodesic surface*, if the first inequality holds for each $C \in \mathcal{C}$, and the second inequality holds for each $C \in \mathcal{C}$ shared by two pants. Note that this definition is more general than the surfaces constructed in Theorem 2.1.1, since these surfaces may have boundary. In [20], it is showed that (R, ϵ)-almost totally geodesic closed surfaces are π_1-injective if $\epsilon > 0$ is sufficient small and $R > 0$ is sufficient large.

The existence of such almost totally geodesic closed surfaces is given by the following strategy. For any good curve γ, one can consider all the good pants in M with γ as one of its boundary component, then consider all the feet as $foot_\gamma(\Pi)$ on $N^1(\sqrt{\gamma})$. Kahn and Markovic showed that these feet on $N^1(\sqrt{\gamma})$ are very equidistributed, so they can paste all the good pants together in a proper way such that $|s(C) - 1| < \frac{\epsilon}{R}$ holds.

In the proof of the existence of good pants (curves) and the equidistribution result, the following exponential mixing property of frame flow played a crucial role.

Theorem 2.1.5 ([35],[38])**.** *Let M be a closed hyperbolic 3-manifold, $\mathcal{F}(M^3)$ be the frame bundle of M, Λ be the Liouville measure on $\mathcal{F}(M^3)$ which is invariant under the frame flow $g_t : \mathcal{F}(M^3) \to \mathcal{F}(M^3)$.*

Then there exists a constant $q > 0$ that depends only on M^3 such that the following statement holds. Let $\psi, \phi : \mathcal{F}(M^3) \to \mathbb{R}$ be two C^1 functions, then for any $r \in \mathbb{R}$,

$$\left|\Lambda\left(\mathcal{F}(M^3)\right)\int_{\mathcal{F}(M^3)}(g_r^*\psi)(x)\phi(x)d\Lambda(x) - \int_{\mathcal{F}(M^3)}\psi(x)d\Lambda(x)\int_{\mathcal{F}(M^3)}\phi(x)d\Lambda(x)\right| \leq Ce^{-q|r|}.$$

Here $C > 0$ only depends on the C^1 norms of ψ and ϕ.

2.2 The Ehrenpreis conjecture

After proving the Surface Subgroup Theorem, Kahn and Markovic worked on 1-dimensional lower, and proved the following Ehrenpreis conjecture in [19].

Theorem 2.2.1 ([19]). *Let S and T be two closed Riemann surfaces with negative Euler characteristics. Then for any $k > 1$, S and T admit finite covers S_1 and T_1 respectively, such that there exists a k-quasiconformal map $f : S_1 \to T_1$.*

To prove Theorem 2.2.1, Kahn and Markovic showed the following theorem.

Theorem 2.2.2 ([19]). *Let S be a closed hyperbolic Riemann surface. Then for any $k > 1$, there exists $R_0(K, S) > 0$, such that for any $R > R_0(K, S)$, the following statement holds. There exists a closed hyperbolic Riemann surface O with pants decomposition $\mathcal{C}$, satisfying $\mathbf{l}(C) = R$ and $s(C) = 1$ for any $C \in \mathcal{C}$, such that there exists a k-quasiconformal map $g : O \to S_1$ from O to some finite cover S_1 of S.*

As the proof of Theorem 2.1.1, one can try to prove Theorem 2.2.2 by pasting immersed good pants in S along good curves, to obtain a finite cover of S which satisfies $|\mathbf{l}(C) - R| < 2\epsilon$ and $|s(C) - 1| < \frac{\epsilon}{R}$. Then this finite cover gives the desired k-quasiconformal map. To make the pasting construction works, one need to make sure that, for any good curve γ in S, the number of good pants to the left of γ should exactly equal the number of good pants to the right of γ. However, the equidistribution result only claims that these two numbers are very close to each other, but may not be equal. In dimension 3, since the unit normal bundle of a closed geodesic is connected (a topological torus), such a problem does not appear. However, one does need to take care of this imbalance problem in dimension 2.

To deal with the problem, Kahn and Markovic studied the *good pants homology*. Two elements c_1 and c_2 in $\mathbb{R}\mathbf{\Gamma}_{R,\epsilon}$ are considered to be equivalent in the (R, ϵ)-good pants homology if there exists $w \in \mathbb{R}\mathbf{\Pi}_{R,\epsilon}$ such that $\partial w = c_1 - c_2$. Then the (R, ϵ)-good pants homology is defined to be $\mathbb{R}\mathbf{\Gamma}_{R,\epsilon}/\partial\mathbb{R}\mathbf{\Pi}_{R,\epsilon}$, and the following result was proved in [19].

Theorem 2.2.3 ([19]). *Given a closed hyperbolic surface S, for small enough $\epsilon > 0$ depending on S and large enough $R > 0$ depending on ϵ and S, the (R, ϵ)-good pants*

homology of S is naturally isomorphic with $H_1(S;\mathbb{R})$. Moreover, the same statement holds if the real coefficient is replaced by rational coefficient.

By using Theorem 2.2.3 and randomization technique, Kahn and Markovic could take care of the imbalance problem, and proved Theorem 2.2.2.

2.3 Construction of almost totally geodesic subsurfaces with boundary

In [25], Liu and Markovic pushed the theory of good pants homology from dimension 2 to dimension 3. Instead of working on real (or rational) coefficient as in Theorem 2.2.3, they worked on homology with integer coefficient. In [25], they proved the following theorems. (Note that Theorem 2.3.1 is very similar with Theorem 2.2.3).

Theorem 2.3.1 ([25])**.** *Given a closed oriented hyperbolic 3-manifold M, for small enough $\epsilon > 0$ depending on M and large enough $R > 0$ depending on ϵ and M, let $\Omega_{R,\epsilon}(M) = \mathbb{Z}\mathbf{\Gamma}_{R,\epsilon}/\partial\mathbb{Z}\mathbf{\Pi}_{R,\epsilon}$ be the pants cobordism group of M. Then there is a natural isomorphism $\Phi : \Omega_{R,\epsilon}(M) \to H_1(SO(M);\mathbb{Z})$. Here $SO(M)$ denotes the bundle of orthonormal frames of M which give the orientation of M.*

Theorem 2.3.2 ([25])**.** *Given a closed hyperbolic 3-manifold M, let $L \subset M$ be a multicurve such that each component of L is noncontractible in M. Then for any homology class $\alpha \in H_2(M, L;\mathbb{Z})$, there exists an oriented connected (R,ϵ)-almost totally geodesic surface $(F, \partial F) \looparrowright (M, L)$, which realizes a nonzero positive integer multiple of α.*

Since Theorem 2.3.1 plays a very important role in our application, now we give more explanation about it. We first fix the constant $\epsilon > 0$ such that 2ϵ is smaller than the injective radius of M.

For any $\gamma \in \mathbf{\Gamma}_{R,\epsilon}$, a map $\hat{\gamma} : S^1 \to SO(M)$ is defined in [25], which is called the *canonical lifting* of γ and gives the definition of Φ. To define $\hat{\gamma}$, choose a point $p \in \gamma$, and take an orthonormal frame $e_p = (\vec{t}, \vec{n}, \vec{t}\times\vec{n})$ in T_pM such that $\vec{t}$ is tangent to γ and follows the orientation of γ. Then $\hat{\gamma}$ is defined by first flow e_p once around γ by parallel transportation, then do a counterclockwise 2π-rotation about $\vec{n}$, finally travel back to e_p along a 2ϵ-short path. Then the isomorphism $\Phi : \Omega_{R,\epsilon}(M) \to H_1(SO(M);\mathbb{Z})$ is defined by $\gamma \to [\hat{\gamma}] \in H_1(SO(M);\mathbb{Z})$.

Note that the concept of (R,ϵ)-almost totally geodesic surface (possible with boundary) was also implicitly given in [25]. In Lemma 3.8 of [25], it is shown that for any small enough $\epsilon > 0$ and large enough $R > 0$, immersed (R,ϵ)-almost totally geodesic surfaces (possibly with boundary) are π_1-injective.

As a corollary of Theorem 2.3.1, we have the following result. The statement of Corollary 2.3.3 is very similar with Theorem 1.4 of [25], and the idea of the proof is scattered in a few proofs in [25]. We reorganize the material there and give the following statement, which is convenient for our application. We also give a brief proof here, by following the idea in [25].

Corollary 2.3.3. *Let M be a closed hyperbolic 3-manifold, then for any small enough $\epsilon > 0$ depending on M, and any large enough $R > 0$ depending on ϵ and M, the following statement holds. For any null-homologous oriented (R,ϵ)-multicurve $L \in \mathbb{Z}\mathbf{\Gamma}_{R,\epsilon}$, there is a nontrivial invariant $\sigma(L) \in \mathbb{Z}_2$ defined, such that the following properties hold.*

- $\sigma(L_1 \sqcup L_2) = \sigma(L_1) + \sigma(L_2)$.
- $\sigma(L) = \bar{0}$ *if and only if L bounds an immersed oriented (R,ϵ)-almost totally geodesic subsurface S in M. Moreover, if we associate each component l_i ($i = 1, \cdots, n$) of L with a normal vector $\vec{v}_i \in N^1(\sqrt{l_i})$, then the surface S can be constructed to satisfy the following condition. Let C_i be the boundary component*

of S which is mapped to l_i, and Π_i be the pants in S with C_i as one of its cuff, then the foot of Π_i on l_i is $\frac{\epsilon}{R}$-close to $\vec{v}_i$.

Proof. Since L is null-homologous, by Theorem 2.3.1, $\Phi(L) \in H_1(SO(3);\mathbb{Z}) \subset H_1(SO(M);\mathbb{Z})$. So $\sigma(L)$ is simply defined to be $\Phi(L) \in H_1(SO(3);\mathbb{Z}) \cong \mathbb{Z}_2$. All the statements are clearly true by Theorem 2.3.1, except the statement that $\sigma(L) = \bar{0}$ implies that L bounds an immersed oriented (R,ϵ)-almost totally geodesic subsurface in M, and the moreover part.

To follow the terminology in [25], an integer valued measure μ on $\mathbf{\Pi}_{R,\epsilon}$ is defined to be an element in $\mathbb{Z}\mathbf{\Pi}_{R,\epsilon}$ such that it is nonnegative on each component in $\mathbf{\Pi}_{R,\epsilon}$. We say μ is ubiquitous if μ is positive on each component in $\mathbf{\Pi}_{R,\epsilon}$. We say μ is (R,ϵ')-nearly even footed, if for each good curve γ, the feet of good pants on $N^1(\sqrt{\gamma})$ (weighted by μ) is close to some scaling of the standard Lebesgue measure on the torus, in the rate of $\frac{\epsilon'}{R}$. Then Theorem 2.10 of [25] (essentially given by [20]) implies that there exists a ubiquitous, $(R,\frac{\epsilon}{2})$-nearly even footed, integer valued measure μ_0 on $\mathbf{\Pi}_{R,\epsilon}$, such that $\partial\mu_0 = 0 \in \mathbb{Z}\mathbf{\Gamma}_{R,\epsilon}$. Such a nice measure μ_0 on $\mathbf{\Pi}_{R,\epsilon}$ instructs us to construct an immersed (R,ϵ)-almost totally geodesic closed surface in M (Theorem 2.1.1).

Since $\sigma(L) = \bar{0}$, Theorem 2.3.1 implies that there exists $w \in \mathbb{Z}\mathbf{\Pi}_{R,\epsilon}$, such that $\partial w = L$, and w defines an integer valued measure on $\mathbf{\Pi}_{R,\epsilon}$. By adding the ubiquitous, $(R,\frac{\epsilon}{2})$-nearly even footed, integer valued measure μ_0 on $\mathbf{\Pi}_{R,\epsilon}$, $w + n\mu_0$ is still ubiquitous, (R,ϵ)-nearly even footed for large enough positive integer n, and $\partial(w+n\mu_0) = L$. So $w+n\mu_0$ admits an (R,ϵ)-nearly unit shearing gluing (this gluing satisfies $|s(C)-1| < \frac{\epsilon}{R}$), which gives an immersed (R,ϵ)-almost totally geodesic surface S in M with $\partial S = L$. By Lemma 3.8 of [25], each component of S is π_1-injective.

For the moreover part, we will construct an immersed surface $S' \looparrowright M$ which contains the surface $S \looparrowright M$ we have constructed as a subsurface. Let C_i be the boundary component of S which is mapped to l_i, and we use Π_i to denote the pair of

pants in S with C_i as a cuff. Let $\vec{u}_i$ be the foot of Π_i on l_i. Then for the ubiquitous, $(R, \frac{\epsilon}{2})$-nearly even footed, integer valued measure μ_0 on $\mathbf{\Pi}_{R,\epsilon}$, we will not use the gluing satisfying the $(R, \frac{\epsilon}{2})$-nearly unit shearing condition which glues all the cuffs and gives a closed surface. Here we will use some alternative gluing to get the desired subsurface of S'.

To be precise, let $\Pi_{i,+}$ and $\Pi_{i,-}$ be two pants in $\mathbf{\Pi}_{R,\epsilon}$, such that l_i and $\bar{l}_i$ are oriented boundary component of $\Pi_{i,+}$ and $\Pi_{i,-}$ respectively. Moreover, $\Pi_{i,+}$ and $\Pi_{i,-}$ also satisfy that, the foot of $\Pi_{i,+}$ on l_i is $\frac{\epsilon}{R}$-close to $\vec{v}_i$, and the foot of $\Pi_{i,-}$ on $\bar{l}_i$ is $\frac{\epsilon}{R}$-close to the $1 + \pi i$ shearing of $\vec{u}_i$. Then there exists an (R, ϵ)-nearly unit shearing gluing of μ_0, which glues all the cuffs of the pants given by μ_0, except the two cuffs of $\Pi_{i,+}$ and $\Pi_{i,-}$ corresponding with l_i and $\bar{l}_i$ respectively. This gluing gives an immersed (R, ϵ)-almost totally geodesic subsurface $S_i \looparrowright M$, with two boundary components.

Now we paste S and $\{S_i\}_{i=1}^n$ together, by gluing Π_i and $\Pi_{i,-}$ along l_i, to get a new immersed surface $S' \looparrowright M$. By the construction, we know that S' is a oriented π_1-injective (R, ϵ)-almost totally geodesic subsurface in M, such that L is its oriented boundary, and the foot on l_i is $\frac{\epsilon}{R}$-close to v_i. By throwing away all the closed surface components of S', we can suppose all the components of S' are surfaces with boundary.

□

Remark 2.3.4. *In [25], Liu and Markovic were interested in proving Theorem 2.3.2, i.e. to realize a second homology class α by an immersed connected (R, ϵ)-almost totally geodesic surface. So they need to take some non-zero integer multiple of α, for technical reason. In this thesis, we only need to find an immersed (R, ϵ)-almost totally geodesic surface bounded by L, but do not care much about its homology class. So taking an integer multiple of L is not necessary.*

Remark 2.3.5. *Actually, for all the statements in this chapter, the condition*

$$\begin{cases} |\mathbf{hl}(C) - \frac{R}{2}| < \epsilon, \\ |s(C) - 1| < \frac{\epsilon}{R} \end{cases}$$

can always be replaced by

$$\begin{cases} |\mathbf{hl}(C) - \frac{R}{2}| < \frac{\epsilon}{R}, \\ |s(C) - 1| < \frac{\epsilon}{R^2}, \end{cases}$$

while $\mathbf{\Gamma}_{R,\epsilon}$ *and* $\mathbf{\Pi}_{R,\epsilon}$ *can also be replace by* $\mathbf{\Gamma}_{R,\frac{\epsilon}{R}}$ *and* $\mathbf{\Pi}_{R,\frac{\epsilon}{R}}$ *respectively (as pointed out in [44]). So when we apply the results in this chapter, we always suppose such an* $\frac{1}{R}$ *factor has been multiplied to* ϵ*. The main reason that such a refinement is applicable is, the exponential mixing property of frame flow ([35], [38]) gives the exponential mixing rate, which beats any polynomial rate.*

Chapter 3

Existence of virtual torsion

In this chapter, we will give the proof of Theorem 1.2.3. The main step of the proof is to do the following construction: for any closed hyperbolic 3-manifold M and any positive integer $p \geq 2$, we will construct an immersed π_1-injective 2-complex $f : X_p \looparrowright M$. This X_p is a local model of the homological $\mathbb{Z}_p$-torsion, which will provide us the desired virtual homological torsion. In this proof, we will only use results in [20], and the results in [25] are not necessary here.

3.1 Construction of an immersed π_1-injective 2-complex

The exponential mixing theorem (Theorem 2.1.5) implies that, for any positive integer $p \geq 2$, large enough R and small enough $\epsilon > 0$, there exists a closed geodesic γ' in M such that $|\mathbf{l}(\gamma') - \frac{R+2\pi i}{p}| < \frac{\epsilon}{pR}$. Then $\gamma = p\gamma'$ will be a nonprimitive closed geodesic with $|\mathbf{l}(\gamma) - R| < \frac{2\epsilon}{R}$, which is an (R, ϵ)-good curve.

Let $f : S \looparrowright M^3$ be a Kahn-Markovic surface with pants decomposition $\mathcal{C}$, and some $C \in \mathcal{C}$ is mapped to γ. By taking a two-fold cover of S if necessary, we can suppose C is a non-separating curve on S and the two pants adjacent to C are distinct.

Let S' be the surface obtained from S by cutting along C, S' is equipped with an induced pants decomposition $(S', \mathcal{C}')$ (here $\mathcal{C}'$ does not contain the boundary of S'). Let C_1 and C_2 be the two boundary components of S' and we choose orientations for C_1 and C_2 such that $[C_1] - [C_2] = 0 \in H_1(S'; \mathbb{Z})$.

Let $\rho_i : C_i \to C_i$, $i = 1, 2$ be the $\frac{2\pi}{p}$-rotation on the circle. Then we define X_p to be the 2-complex obtained from S' quotient by the ρ_i-action for $i = 1, 2$, and let c_i be the oriented curve in X_p which is the image of C_i. Since C_1 and C_2 are both mapped to γ' by p-sheet covers, $f : S \looparrowright M$ induces a map $g : X_p \looparrowright M$ with c_i mapped to γ' for $i = 1, 2$. Then the pants decomposition $\mathcal{C}'$ on S' and two curves C_1, C_2 induce a "pants decomposition" on X_p, which is denoted by $(X_p, \mathcal{C}', \{C_1, C_2\})$.

Now we can define a graph $G(X_p)$ from $(X_p, \mathcal{C}', \{C_1, C_2\})$: vertices of $G(X_p)$ are pants in $(X_p, \mathcal{C}', \{C_1, C_2\})$, two vertices are connected by an edge if the corresponding pants are both adjacent with some $C \in \mathcal{C}'$. $G(X_p)$ is a trivalent graph except at two vertices v_1, v_2, which correspond with the two pants containing c_1 and c_2 respectively, and both of them have valence 2. Let $l(G(X_p))$ be the length of the shortest homotopic nontrivial path in $G(X_p)$ with end points in $\{v_1, v_2\}$, and $n(G(X_p))$ be the number of different such paths. Then we define the complexity of $G(X_p)$ to be $c(G(X_p)) = (l(G(X_p)), -n(G(X_p)))$, and we will do inductive constructions to make $G(X_p)$ more and more complicated until $l(G(X_p)) > Re^{\frac{R}{4}}$.

For any shortest homotopic nontrivial path α with length $l \geq 1$, let $k = [\frac{l+1}{2}]$ and e be the k-th edge on α. Let $C_0 \in \mathcal{C}'$ be the curve in the pants decomposition of X_p corresponding with e, and let C_0' denote the corresponding curve in S. Take a copy of S, and pass to a two-fold cover if necessary, such that C_0' is a non-separating curve in S. Then we can cut X_p and S along C_0 and C_0' respectively, and re-paste them together to get a connected 2-complex X_p' with pants decomposition $\mathcal{C}''$. Since the

pants in S and X_p have the same foot on $N^1(\sqrt{f(C_0)})$, we still have

$$\begin{cases} |\mathbf{hl}(C) - \frac{R}{2}| < \frac{\epsilon}{R}, \\ |s(C) - 1| < \frac{\epsilon}{R^2}. \end{cases}$$

for any $C \in \mathcal{C}''$.

After this surgery, the shortest homotopic nontrivial pathes in $G(X_p)$ going through the edge e have been broken, and the corresponding length increase at least by 1 in $G(X_p')$. So the complexity $c(G(X_p')) = (l(G(X_p')), -n(G(X_p'))$ is bigger than $c(G(X_p)) = (l(G(X_p)), -n(G(X_p))$, i.e. either $l(G)$ increases, or $l(G)$ does not change and $-n(G)$ increases. After finite many steps of such construction, we can assure $l(G) > Re^{\frac{R}{4}}$. For simplicity, we still denote the 2-complex by X_p, and denote the pants decomposition by $(X_p, \mathcal{C}', \{C_1, C_2\})$.

Definition 3.1.1. *A map $f : X_p \to M$ is called viable if the restriction of f on each pants is π_1-injective, and $\mathbf{hl}_\Pi(C) = \mathbf{hl}_{\Pi'}(C)$ for any two pants Π and Π' sharing $C \in \mathcal{C}' \cup \{C_1, C_2\}$.*

As a summary of the above construction, we have the following proposition.

Proposition 3.1.2. *For any closed hyperbolic 3-manifold M, and any positive integer $p \geq 2$, there exists a constant $\hat{\epsilon} > 0$, such that for any $0 < \epsilon < \hat{\epsilon}$ and any R sufficiently large, the following statement holds. There exists a 2-complex X_p as above with pants decomposition $(X_p, \mathcal{C}', \{C_1, C_2\})$, and a viable map $f : X_p \to M$ such that:*

1. *The induced graph $G(X_p)$ satiesfies $l(G(X_p)) > Re^{\frac{R}{4}}$,*
2. *For any $C \in \mathcal{C}' \cup \{C_1, C_2\}$, $|\mathbf{hl}(C) - \frac{R}{2}| < \frac{\epsilon}{R}$,*
3. *For any $C \in \mathcal{C}'$, $|s(C) - 1| < \frac{\epsilon}{R^2}$,*
4. *Let c_k be the image of C_k in X_p, then $|\mathbf{l}(c_k) - \frac{R+2\pi i}{p}| < \frac{\epsilon}{pR}$ for $k = 1, 2$.*

3.2 Finite cyclic subgroups in virtual homology

The following theorem is the main technical theorem in the proof of Theorem 1.2.3, which is an analogy of Theorem 2.2 of [20]:

Theorem 3.2.1. *There are universal constants $\hat{\epsilon} > 0$ and $\hat{R} > 0$ depend only on p, such that for any $0 < \epsilon < \hat{\epsilon}$ and any $R > \hat{R} > 0$, the following statement holds. If X_p is a 2-complex with pants decomposition $(X_p, \mathcal{C}', \{C_1, C_2\})$, and $\rho : \pi_1(X_p) \to PSL_2(\mathbb{C})$ is a viable representation such that:*

1. *The induced graph $G(X_p)$ satisfies $l(G(X_p)) > Re^{\frac{R}{4}}$,*
2. *For any $C \in \mathcal{C}' \cup \{C_1, C_2\}$, $|\mathbf{hl}(C) - \frac{R}{2}| < \frac{\epsilon}{R}$,*
3. *For any $C \in \mathcal{C}'$, $|s(C) - 1| < \frac{\epsilon}{R^2}$,*
4. *$|\mathbf{l}(c_k) - \frac{R+2\pi i}{p}| < \frac{\epsilon}{pR}$ for $k = 1, 2$.*

Then $\rho : \pi_1(X_p) \to PSL_2(\mathbb{C})$ is an injective map and $\rho(\pi_1(X_p))$ is a convex-cocompact subgroup of $Isom_+(\mathbb{H}^3)$.

The proof of Theorem 3.2.1 will be deferred to Chapter 5. In this chapter, we will focus on proving Theorem 1.2.3, by assuming Theorem 3.2.1.

Let $\rho_0 : \pi_1(X_p) \to PSL_2(\mathbb{C})$ be the representation near f_* and satisfies:

1. For any $C \in \mathcal{C}' \cup \{C_1, C_2\}$, $\mathbf{hl}(C) = \frac{R}{2}$,
2. For any $C \in \mathcal{C}'$, $s(C) = 1$,
3. $\mathbf{l}(c_k) = \frac{R+2\pi i}{p}$ for $k = 1, 2$.

Let $q : \widetilde{X}_p \to X_p$ be the universal cover of X_p. There is a natural map $\widetilde{f_0} : \widetilde{X}_p \to \mathbb{H}^3$ from $\widetilde{X}_p$ to the hyperbolic 3-space to realize the representation ρ_0, such that $\widetilde{f_0}$ maps each component of $\widetilde{X}_p \setminus q^{-1}(c_1 \cup c_2)$ to a totally geodesic subsurface in $\mathbb{H}^3$. $\widetilde{f_0}$ induces

a path metric d_0 on $\widetilde{X}_p$: for any $x, y \in \widetilde{X}_p$, define $d_0(x,y) = inf\{l(\widetilde{f}_0(\gamma))|\ \gamma$ is a path in $\widetilde{X}_p$ from x to $y\}$.

By using elementary hyperbolic geometry, we have the following lemma.

Lemma 3.2.2. *For R large enough, if the induced graph $G(X_p)$ satisfies $l(G(X_p)) > Re^{\frac{R}{4}}$, then $\widetilde{f}_0 : (\widetilde{X}_p, d_0) \to (\mathbb{H}^3, d_{\mathbb{H}^3})$ is injective and a quasi-isometric embedding. In particular, $\rho : \pi_1(X_p) \to PSL_2(\mathbb{C})$ is an injective map.*

Proof. In this proof, we may abuse notation, and use objects in $\widetilde{X}_p$ to denote their images in $\mathbb{H}^3$.

For any two points $x, y \in \widetilde{X}_p$, the shortest path α connecting x and y is a piecewise geodesic. Let $L_1, L_2, \cdots, L_m$ be consecutive geodesics in $q^{-1}(c_1 \cup c_2)$ intersecting with α, and let α_i be the segment of α between L_i and L_{i+1}. Give an arbitrary orientation on L_i, then the angle between α_{i-1}, L_i and the angle between α_i, L_i sum to π. Since $\mathbf{l}(c_k) = \frac{R+2\pi i}{p}$, the angle between $\widetilde{f}_0(\alpha_{i-1})$ and $\widetilde{f}_0(\alpha_i)$ in $\mathbb{H}^3$ is greater or equal $\frac{2\pi}{p}$.

For any $i \in \{1, \cdots, m-1\}$, α_i lies in a totally geodesic plane and connects two components of $q^{-1}(c_1 \cup c_2)$. So $q(\alpha_i)$ is a homotopic nontrivial path in X_p with end points in $c_1 \cup c_2$, and it projects to a path β in graph $G(X_p)$ with end points in $\{v_1, v_2\}$.

If β is a homotopic nontrivial path in $G(X_p)$, since $l(G(X_p)) > Re^{\frac{R}{4}}$, the combinatorial length of β is greater than $Re^{\frac{R}{4}}$. Since the distance between two different cuffs in the hyperbolic pair of pants with cuff length R is roughly $2e^{-\frac{R}{4}}$, the length of α_i is greater than R. If β is a homotopic trivial path in $G(X_p)$, then β has a subsegment $e\bar{e}$ for some edge e in $G(X_p)$, or β is just a point. So α_i contains a geodesic arc which is a homotopic nontrivial path in the pair of pants with end points lying on the same cuff. Since the pants have cuff length R, such a path has length roughly $R/2 + 2\ln 2$. So in this case, α_i has length greater than $R/2$. As a summary, for any $i \in \{1, \cdots, m-1\}$, α_i has length greater than $R/2$.

Now the proof reduces to an elementary exercise in hyperbolic geometry: Let α be a piecewise geodesic in $\mathbb{H}^3$ consists of geodesic segments $\alpha_0, \cdots, \alpha_m$, and the length of α_i be l_i. Then for large enough R, if $l_i \geq R/2$ for each $i \in \{1, \cdots, m-1\}$ and the angle between α_{i-1} and α_i is greater or equal to $\frac{2\pi}{p}$ for $i \in \{2, \cdots, m-1\}$. Then the distance between the end points of α in $\mathbb{H}^3$ is greater than $(1-\frac{1}{p})\sum_{i=0}^{m} l_i - \frac{R}{4}$.

Since $d_0(x,y) = \sum_{i=0}^{m} l(\alpha_i)$, we have $(1-\frac{1}{p})d_0(x,y) - \frac{R}{4} \leq d_{\mathbb{H}^3}(\widetilde{f}_0(x), \widetilde{f}_0(y)) \leq d_0(x,y)$. So $\widetilde{f}_0$ is a quasi-isometry, and ρ is injective. This inequality also tells us $\widetilde{f}_0(x) \neq \widetilde{f}_0(y)$ if α intersects with at least two geodesics in $q^{-1}(c_1 \cup c_2)$, and the injectivity property obviously holds for the other cases. □

We will first prove Theorem 1.2.3 for finite cyclic abelian groups. We will give two proofs here, the first proof will only prove a weaker statement: the finite cyclic group embeds into the virtual homology of closed hyperbolic 3-manifolds. However, this proof is in a more geometric flavor. The second proof proves the stronger statement about virtual direct summand.

Proposition 3.2.3. *For any finite cyclic abelian group $\mathbb{Z}_n$, and any closed hyperbolic 3-manifold M, there exists a finite cover M' of M, such that $\mathbb{Z}_n$ embeds into $Tor(H_1(M';\mathbb{Z}))$.*

Proof. Let $p = 2n$, then Proposition 3.1.2 gives an immersed 2-complex $f : X_p \looparrowright M$ with a pants decomposition $(X_p, \mathcal{C}', \{C_1, C_2\})$ satisfying the condition in Theorem 3.2.1.

By Lemma 3.2.2, $\rho_0(\pi_1(X_p))$ is a convex cocompact Kleinian group, so ρ_0 lies in $int(AH(\pi_1(X_p)))$. Here

$$AH(\pi_1(X_p)) = \{\rho : \pi_1(X_p) \to PSL_2(\mathbb{C}) |\, \rho \textit{ is a discrete, } faithful \textit{ representation}\}/\sim,$$

where the relation is given by conjugation.

Since the map $f : X_p \looparrowright M$ induces a representation $f_* : \pi_1(X_p) \to \pi_1(M) \subset PSL_2(\mathbb{C})$ satisfying the assumption of Theorem 3.2.1, f_* is an injective map. Actually, f_* lies in a continuously family of deformations of ρ_0.

Let $\mathbb{D}(0,r)$ denote the disc in the complex plane centered at 0 with radius r. For any $C \in \mathcal{C}'$, it is assigned with two complex numbers $\xi_C, \eta_C \in \mathbb{D}(0,\hat{\epsilon})$. Similarly, for c_k, it is assigned with $\xi_k \in \mathbb{D}(0,\hat{\epsilon})$ for $k = 1, 2$. Then for any $\tau \in \mathbb{D}(0,1)$, there is a unique representation $\rho_\tau : \pi_1(X_p) \to PSL_2(\mathbb{C})$ near ρ_0 such that:

1. For any $C \in \mathcal{C}'$,
$$\begin{cases} \mathbf{hl}(C) = \frac{R}{2} + \frac{\tau\xi_C}{R}, \\ s(C) = 1 + \frac{\tau\eta_C}{R^2}. \end{cases}$$

2. $\mathbf{l}(c_k) = \frac{R+2\pi i}{p} + \frac{\tau\xi_k}{pR}$ for $k = 1, 2$,

3. $\rho_1 = f_*$.

By Theorem 3.2.1, $\{\rho_\tau(\pi_1(X_p))\}_{\tau\in\mathbb{D}(0,1)}$ is a continuous family of convex cocompact Kleinian groups, and $f_*(\pi_1(X_p))$ lies in this family. So f_* and ρ_0 lie in the same component of $int(AH(\pi_1(X_p)))$, thus $\mathbb{H}^3/f_*(\pi_1(X_p))$ is homeomorphic to $\mathbb{H}^3/\rho_0(\pi_1(X_p))$.

Let $f_0 : X_p \to \mathbb{H}^3/\rho_0(\pi_1(X_p))$ be the map induced by $\widetilde{f_0}$. Then Lemma 3.2.2 implies that f_0 is an embedding, and a neighborhood $\hat{M} = N(f_0(X_p))$ is a compact core of $\mathbb{H}^3/\rho_0(\pi_1(X_p))$. It is easy to figure out the topological type of $\hat{M}$ here.

Recall that S' is an orientable surface with two oriented boundary components C_1, C_2 with $[C_1] - [C_2] = 0 \in H_1(S';\mathbb{Z})$, and X_p is a quotient of S'. Let V be the solid torus and α be the oriented $(p,1)$ curve on ∂V, then α has a neighborhood $\alpha\times[-1,1] \subset \partial V$. Take two copies of $(V, \alpha \times [-1,1])$ and denote them by $(V_1, \alpha_1 \times [-1,1])$ and $(V_2, \alpha_2 \times [-1,1])$ respectively. Let $\psi_1 : C_1 \to \alpha_1$ and $\psi_2 : C_2 \to \alpha_2$ be two orientation preserving homeomorphisms, and let $\phi_1 : C_1 \times [-1,1] \to \alpha_1 \times [-1,1]$ be $\psi_1 \times id$, and $\phi_2 : C_2 \times [-1,1] \to \alpha_2 \times [-1,1]$ be $\psi_2 \times (-id)$. Then $\hat{M} = N(f_0(X_p))$ is homeomorphic

to $V_1 \cup_{\phi_1} S' \times [-1,1] \cup_{\phi_2} V_2$ and the boundary of $\hat{M}$ is incompressible. Such a $\hat{M}$ is called a "book of I-bundles" by Culler and Shalen in [10].

Since $\mathbb{H}^3/f_*(\pi_1(X_p))$ is homeomorphic to $\mathbb{H}^3/\rho_0(\pi_1(X_p))$, $\mathbb{H}^3/f_*(\pi_1(X_p))$ has a submanifold $\hat{M}'$ homeomorphic to $\hat{M}$. It is known that the fundamental groups of hyperbolic 3-manifolds are LERF ([3],[46]), so there exists an intermediate cover M' of $\mathbb{H}^3/f_*(\pi_1(X_p)) \to M$ such that $\hat{M}'$ embeds into M' ([39]).

The topology of $\hat{M}'$ is well-understood now. $\hat{M}'$ has only one boundary component, and $H_1(\hat{M}';\mathbb{Z}) = \mathbb{Z}^{2g} \oplus \mathbb{Z} \oplus \mathbb{Z}_p$ for $g = g(S)$. The $\mathbb{Z}$-subgroup is generated by $[c_1]$ and the $\mathbb{Z}_p$ subgroup is generated by $[c_1] - [c_2]$. Since the image of $i_* : H_1(\partial\hat{M}';\mathbb{Z}) \to H_1(\hat{M}';\mathbb{Z})$ is $\mathbb{Z}^{2g} + \mathbb{Z}[pc_1] + \mathbb{Z}[[c_1] + [c_2]]$, it is easy to check that $\mathbb{Z}_p \cap i_*(H_1(\partial\hat{M}';\mathbb{Z})) = \{0, \frac{p}{2}([c_1] - [c_2])\}$.

Then an M-V sequence argument shows that $\mathbb{Z}_{p/2} = \mathbb{Z}_n$ embeds into $H_1(M';\mathbb{Z})$.

□

Now let's come to the proof of vitual direct summand.

Proposition 3.2.4. *For any finite cyclic abelian group $\mathbb{Z}_n$, and any closed hyperbolic 3-manifold M, there exists a finite cover M' of M, such that $\mathbb{Z}_n$ is a direct summand of $Tor(H_1(M';\mathbb{Z}))$.*

Proof. Since M is hyperbolic, $\pi_1(M)$ is virtually special by [3] and [46]. So we can suppose that $\pi_1(M)$ is already the fundamental group of a special cube complex.

Let $f : X_n \looparrowright M$ be the π_1-injective map we have constructed in Proposition 3.2.3. Since $f_*(\pi_1(X_n))$ is a convex-cocompact subgroup of $PSL_2(\mathbb{C})$, it is a quasi-convex subgroup of the hyperbolic group $\pi_1(M)$.

Since $f_*(\pi_1(X_n))$ is a quasi-convex subgroup of a special group $\pi_1(M)$, $f_*(\pi_1(X_n))$ is a virtual retract of $\pi_1(M)$ ([16]), i.e. there exists a finite cover M' of M such that the following holds:

1) $f_*(\pi_1(X_n)) \subset \pi_1(M')$;

2) There exists a retraction map $r : \pi_1(M') \to \pi_1(X_n)$ such that $r \circ f_* : \pi_1(X_n) \to \pi_1(X_n)$ is the identity.

So we have induced maps on homology:

$$H_1(X_n; \mathbb{Z}) \xrightarrow{f_*} H_1(M'; \mathbb{Z}) \xrightarrow{i_*} H_1(X_n; \mathbb{Z}).$$

Since the composition gives identity, and $H_1(X_n; \mathbb{Z}) = \mathbb{Z}^{2g+1} \oplus \mathbb{Z}_n$, we know that $\mathbb{Z}^{2g+1} \oplus \mathbb{Z}_n$ is a direct summand of $H_1(M'; \mathbb{Z})$. In particular, $\mathbb{Z}_n$ is a direct summand.

□

Remark 3.2.5. *If n is an odd number, the proof of Proposition 3.2.3 also implies that $\mathbb{Z}_n$ is virtually a direct summand.*

3.3 Finite Abelian subgroups in virtual homology

We will finish the proof of Theorem 1.2.3 in this section. As in the finite cyclic group case, we will give two proofs. One for virtual embedding, and one for virtual direct summand.

Proposition 3.3.1. *For any finite abelian group A, and any closed hyperbolic 3-manifold M, there exists a finite cover M' of M, such that A embeds into $Tor(H_1(M'; \mathbb{Z}))$.*

Proof. We will proof the theorem by induction on the number of generators of the finite abelian group A, and the proof of one generator case has been done in Proposition 3.2.3.

For $A = \mathbb{Z}_{n_1} \oplus \mathbb{Z}_{n_2}$, take $p_k = 2n_k$ for $k = 1, 2$. Then Proposition 3.1.2 and Theorem 3.2.1 give two π_1-injective immersions of 2-complexes $f_1 : X_{p_1} \looparrowright M$ and $f_2 : X_{p_2} \looparrowright M$.

Let $G_1 = (f_1)_*(\pi_1(X_{p_1}))$ and $G_2 = (f_2)_*(\pi_1(X_{p_2}))$ be the two convex cocompact subgroups of $\pi_1(M)$ given by Theorem 3.2.1. Let M_k be the compact manifold whose interior is homeomorphic to $\mathbb{H}^3/G_k$ for $k = 1, 2$.

Take $g \in \pi_1(M^3)$ such that either of the two limit points of g do not lie in the limit sets $\Lambda(G_1)$ and $\Lambda(G_2)$. Then for large enough n, by Kleinian combination Theorem, $j : G_1 * (g^n G_2 g^{-n}) \to \pi_1(M^3)$ is an embedding, and $j(G_1 * (g^n G_2 g^{-n}))$ is a convex cocompact subgroup of $\pi_1(M^3)$. So $\mathbb{H}^3/j(G_1 * (g^n G_2 g^{-n}))$ is homeomorphic to the interior of the boundary connected sum of M_1 and M_2.

Since hyperbolic 3-manifold groups are LERF, run the argument as in the proof of Proposition 3.2.3, we can find a finite cover M' of M, such that $\mathbb{Z}_{n_1} \oplus \mathbb{Z}_{n_2}$ embeds into $H_1(M'; \mathbb{Z})$.

For finite abelian groups with more generators, the result can be shown by induction as the two-generator case. □

Now we come to the proof of Theorem 1.2.3:

Proof. We will still only show the theorem of $A = \mathbb{Z}_{n_1} \oplus \mathbb{Z}_{n_2}$ case, and the proof for general finite abelian groups follows by induction.

As in the proof of Proposition 3.2.4, we suppose $\pi_1(M)$ is already a special group. The proof of Proposition 3.3.1 gives us a quasi-convex subgroup of $\pi_1(M)$ which is isomorphic to $\pi_1(X_{n_1}) * \pi_1(X_{n_2})$. Since $\pi_1(X_{n_1}) * \pi_1(X_{n_2})$ is a virtual retract and $Tor(H_1(\pi_1(X_{n_1}) * \pi_1(X_{n_2}); \mathbb{Z})) \cong \mathbb{Z}_{n_1} \oplus \mathbb{Z}_{n_2}$, $\mathbb{Z}_{n_1} \oplus \mathbb{Z}_{n_2}$ is a direct summand of $Tor(H_1(M'; \mathbb{Z}))$ for some finite cover M' of M. □

Remark 3.3.2. *As in Remark 3.2.5, if the finite abelian group A has odd order, the proof of Proposition 3.3.1 also shows that A is a virtual direct summand.*

Chapter 4

Existence of virtual domination

In this chapter, we will give the proof of Theorem 1.2.5. The essential step is to construct an immersed π_1-injective 2-complex $Z \looparrowright M$ in any closed hyperbolic 3-manifold (Section 4.3). The topology and geometry of this 2-complex Z is suggested by some nice handle structure of N, which is described in Section 4.2. To highlight the geometrical and topological idea, the proof of two technical results on geometric estimations are delayed to Chapter 6. Before we give the rigorous proof, we will first give a sketch of the proof.

4.1 Sketch of the proof

In [41], Thurston described a hyperbolic 3-orbifold M_0, whose underlying space is S^3, and the singular set is the Borromean rings with indices 4. Moreover, in [17], it is shown that M_0 has the following universal property.

Theorem 4.1.1 ([17])**.** *For any closed oriented 3-manifold N, there is a finite index subgroup $\Gamma \subset \pi_1(M_0) \subset PSL_2(\mathbb{C})$, such that N is homeomorphic to $\mathbb{H}^3/\Gamma$ with respect to their orientations. Here we ignore the orbifold structure of $\mathbb{H}^3/\Gamma$, and just consider it as a 3-manifold.*

In Section 4.2, we will construct an orbifold handle structure (see Definition 4.2.1) for M_0, by following the geometry of the regular dodecahedron (or equivalently, regular icosahedron). This orbifold handle structure of M_0 is lifted to an orbifold handle structure of $\mathbb{H}^3/\Gamma$, by the finite sheet covering provided by Theorem 4.1.1. Then we get a nice handle structure of N, which is related with the geometry of the regular icosahedron.

For a closed 3-manifold (orbifold) P endowed with an (orbifold) handle structure, we will use $P^{(1)}$ to denote the union of 0- and 1-handles, and use $P^{(2)}$ to denote the union of 0-, 1- and 2-handles.

There is a 2-subcomplex $X \subset M_0$ which is a deformation retract of $M_0^{(2)}$, and the preimage of X in N is 2-subcomplex $Y \subset N$ which is a deformation retract of $N^{(2)}$.

For any closed oriented hyperbolic 3-manifold M and any point $p \in M$, choose twelve unit vectors in $T_p^1 M$ which correspond with the normal vectors of the twelve faces of the regular dodecahedron. By using the exponential mixing property of the frame flow ([35], [38]), we can construct an immersion of the 1-skeleton $X^{(1)}$ of X into M, denoted by $j' : X^{(1)} \looparrowright M$. The construction of $j' : X^{(1)} \looparrowright M$ is hinted by the geometry of the regular dodecahedron, and satisfies the following conditions.

- The 0-cell of $X^{(1)}$ is mapped to p.
- The six 1-cells are mapped to geodesic arcs in M based at p, and their tangent vectors at p are very close to two of those twelve unit vectors (correspond with the 1-handles of the orbifold handle structure of M_0).
- The image of 1-cells of $X^{(1)}$ are nullhomologous in $H_1(M;\mathbb{Z})$.
- There exists a large real number $R > 0$, such that the following holds. For any 2-cell of X, the image of the boundary of this 2-cell in M is homotopic to a closed geodesic whose complex length is very close to $4R$ or R (depending on whether this 2-cell intersects with the singular set of M_0 or not).

Since the 1-skeleton $Y^{(1)}$ of Y is a finite cover of $X^{(1)}$, $j' : X^{(1)} \looparrowright M$ induces an immersion $Y^{(1)} \looparrowright M$. We take two copies of the immersed 1-complex $Y^{(1)} \looparrowright M$, and denote them by $Y_1^{(1)} \looparrowright M$ and $Y_2^{(1)} \looparrowright M$. For any 2-cell c_i in Y (with an arbitrary orientation), let γ_i be the oriented closed geodesic homotopic to the image of ∂c_i in M. Take two copies of γ_i and denote them by γ_i^1 and γ_i^2, then Corollary 2.3.3 implies that $\gamma_i^1 \sqcup \gamma_i^2$ bound an immersed oriented (R, ϵ)-almost totally geodesic subsurface S_i in M (possibly disconnected).

By pasting the immersed 1-complexes $Y_1^{(1)}$ and $Y_2^{(1)}$, almost totally geodesic surfaces $\{S_i\}$, and almost totally geodesic annuli connecting γ_i^j with $Y_j^{(1)}$ for $j = 1, 2$, we get an immersed 2-complex $j : Z \looparrowright M$. The 2-complex Z is connected and almost totally geodesic in M except along $Y_1^{(1)} \cup Y_2^{(1)} \subset Z$. Moreover, if the surfaces S_i are complicated enough (as in Section 3.1), $j_* : \pi_1(Z) \to \pi_1(M)$ is injective.

Since Agol showed that the groups of hyperbolic 3-manifolds are LERF ([3]), M admits a finite cover M' such that a geometric neighborhood of Z is embedded into M', and we denote this neighborhood by K. Let A_i be the annulus on $\partial N^{(1)}$ where the ith 2-handle of N is attached, then K is homeomorphic to the quotient space of the union of two copies of $N^{(1)}$ and the disjoint union of $\{S_i \times I\}$, by pasting $(\partial S_i) \times I$ to the two copies of A_i.

Then there is a proper degree-2 map $h : (K, \partial K) \to (N^{(2)}, \partial N^{(2)})$, which maps the two copies of $N^{(1)}$ in K to $N^{(1)} \subset N^{(2)}$ by the identity map, and maps $S_i \times I$ to the i-th 2-handle of N. Then by pinching the components of $M' \setminus K$ to wedge of 3-balls, $h : K \to N^{(2)}$ can be extended to a degree-2 map $f : M' \to N$, as desired.

4.2 Orbifold handle structures of M_0 and N

We first give an alternative description of the universal hyperbolic 3-orbifold M_0 mentioned in Section 4.1. The underlying space of M_0 is S^3, and the singular set is

the Borromean rings with indices 4 (cone angle $\frac{\pi}{2}$). M_0 can be obtained as a quotient space of the cube by the following way. For each face of the cube, there is a dark arc drawn in this face as in Figure 1. Then the quotient relation on this face is given by the reflection along this arc, and S^3 is the quotient space of the cube by six such reflections. The six dark arcs in Figure 1 correspond with the Borromean rings in S^3.

The rectangles in Figure 1 are actually combinatorial pentagons, and the combinatorial structure of the boundary of the cube in Figure 1 is isomorphic to the combinatorial structure of the boundary of the regular dodecahedron. Since the hyperbolic right-angled regular dodecahedron exists, it is easy to see that M_0 is a hyperbolic 3-orbifold and $\pi_1(M_0)$ is commensurable with the reflection group of the hyperbolic right-angled regular dodecahedron.

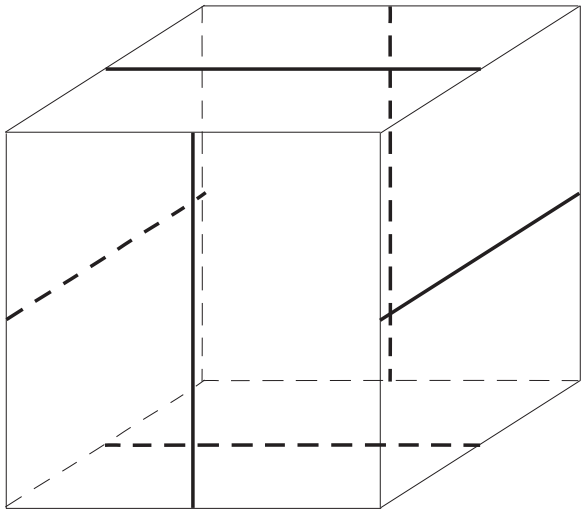

Figure 1

Now we define the concept of orbifold handle structure.

Definition 4.2.1. *Suppose P is a 3-orbifold, whose underlying space is a closed 3-manifold, and its singular set is a union of disjoint embedded circles. An orbifold handle structure of P is a handle structure of the underlying space of P, such that each 0- and 1-handle does not intersect with the singular set, and each 2- and 3-handle intersects with the singular set at most along one arc.*

Note that, if P' is a finite orbifold-cover of P, then an orbifold handle structure of P lifts to an orbifold handle structure of P'.

In Figure 2, we show the 0- and 1-handles of an orbifold handle structure of M_0.

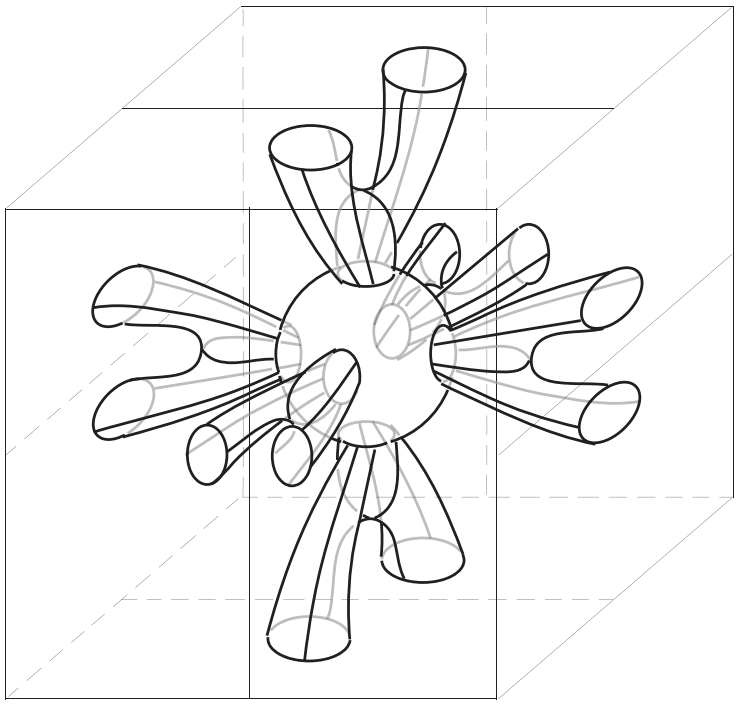

Figure 2

In Figure 3, an 1-dimensional subcomplex T of $M_0^{(1)}$ is given (as union of red arcs). T consists of one 0-cell and six 1-cells, and gives a generating set of $\pi_1(M_0)$. The generators correspond with the six oriented arcs a, b, c, d, e, f in Figure 3, and it is easy to get a presentation of $\pi_1(M_0)$:

$$\pi_1(M_0) = \left\langle a,b,c,d,e,f \;\middle|\; \begin{array}{l} adb^{-1}d^{-1}, acb^{-1}c^{-1}, eaf^{-1}a^{-1}, ebf^{-1}b^{-1}, ced^{-1}e^{-1}, \\ cfd^{-1}f^{-1}, a^4, b^4, c^4, d^4, e^4, f^4 \end{array} \right\rangle. \tag{4.1}$$

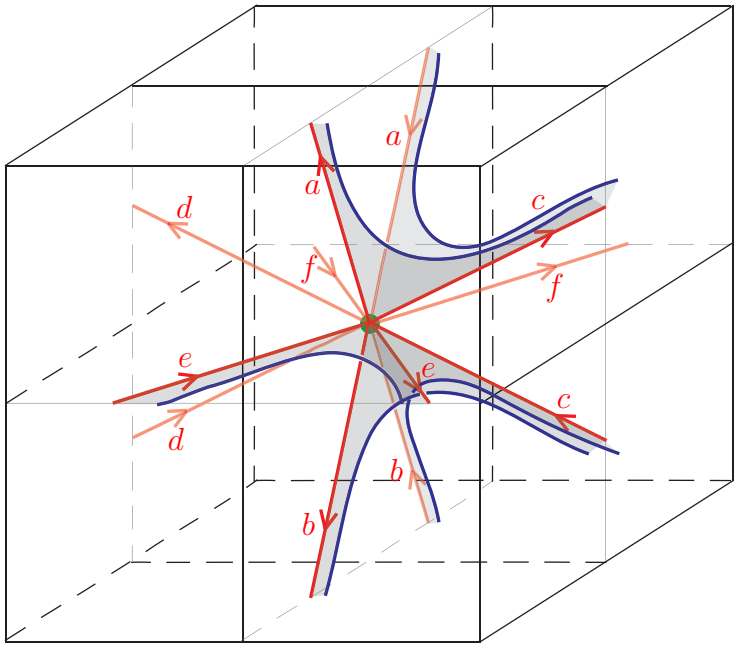

Figure 3

Each relator in this group presentation corresponds with a 2-handle in the orbifold handle structure of M_0. The first six relators correspond with six 2-handles that do not intersect with the singular set. For the remaining six relators, each of them corresponds with a 2-handle intersecting with the singular set along one arc. Under the hint of the group presentation (4.1), the readers can try to figure out the position of the 2-handles in Figure 2. We do not draw the whole picture here since it will be very messy if everything are shown together.

Given the 0-, 1-, and 2-handles of M_0, it is easy to see that the orbifold handle structure of M_0 has seven 3-handles. One of the 3-handle does not intersect with the singular set. For the remaining six 3-handles, each of them intersects with the singular set along one arc.

Figure 4 shows the Kirby diagram of the orbifold handle structure of M_0, as a handle structure of S^3. The six letters A, B, C, D, E, F and their reflections show how the corresponding 1-handles are attached, or equivalently, how the pairs of disks are identified with each other (by reflection about horizontal or vertical lines). The

letters A, B, C, D, E, F in Figure 4 correspond with the six generators in the group presentation (4.1) of $\pi_1(M_0)$.

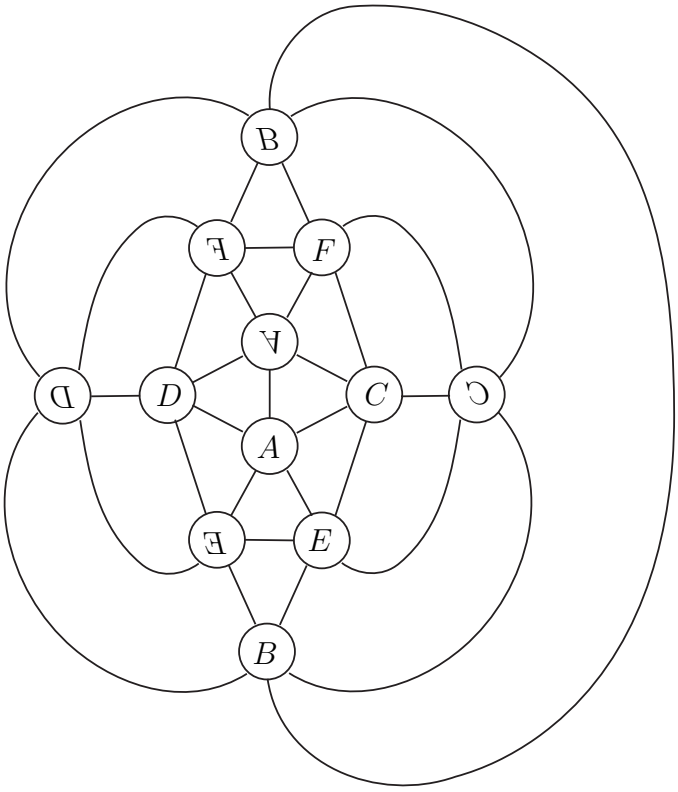

Figure 4

From Figure 4, we can see that the orbifold handle structure (or the group presentation (4.1)) of M_0 is closely related with the geometry of the regular icosahedron. The 0-handle corresponds with the center of the regular icosahedron. The six 1-handles give twelve vectors at the center, which correspond with the twelve vertices of the regular icosahedron. The twelve 2-handles correspond with the thirty edges on the boundary of the regular icosahedron. For the first six 2-handles (correspond with the first six relators in the group presentation (4.1)), each of them corresponds with four edges. For the remaining six 2-handles, each of them corresponds with one edge, since each of them intersects with the singular set (of index 4) along one arc.

Now we construct a 2-dimensional subcomplex X in M_0, which is a deformation retract of $M_0^{(2)}$. It is the union of T and twelve topological discs which are the cores

of the twelve 2-handles of M_0 (with boundary as concatenation of arcs in T). Six of these discs are 4-gons which do not intersect with the singular set. The remaining six are monogons, and each of them intersects with the singular set at one point. For the convenience of our further construction, we subdivide each topological disc to the union of a cornered annulus and a round disc, such that the cornered annulus lies in $M_0^{(1)}$, and the round disc lies in a 2-handle of M_0. In Figure 3, the shaded part corresponds with two such cornered annuli in M_0. One of them is a four-cornered annulus which corresponds with the relator $acb^{-1}c^{-1}$, and the other component is a one-cornered annulus which corresponds with the relator e^4. We still use X to denote this 2-complex with the refined combinatorial structure, and use X' to denote the intersection of X and $M_0^{(1)}$ (which excludes all the round discs). Although X is not a genuine 2-complex, it is easy to subdivide it to get a 2-complex, so we will simply call X a 2-complex. The 0-cell and 1-cells in $T \subset X$ will still be called 0-cell and 1-cells. The round discs will be called 2-cells, and the intersection of 2-cells and cornered-annuli will be called circles.

In summary, $X \subset M_0$ is a 2-complex consists of one 0-cell, six 1-cells, twelve circles, twelve 2-cells (six of them intersect with the singular set), six four-cornered annuli and six one-cornered annuli. In X', those twelve 2-cells are excluded. In Figure 5, we show the picture of the four-cornered annulus and one-cornered annulus, for convenience of the readers.

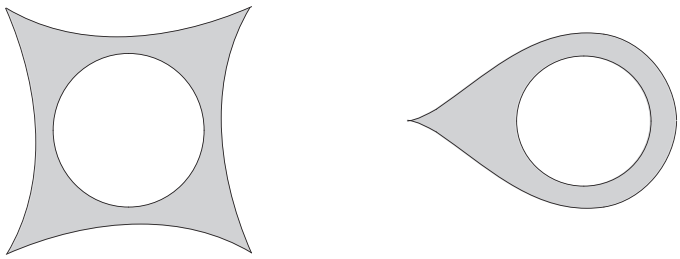

Figure 5

Theorem 4.1.1 can be rephrased to the following statement: For any closed oriented 3-manifold N, M_0 admits a finite orbifold cover M_N, whose underlying space is homeomorphic to N with respect to their orientations. So the orbifold handle structure of M_0 lifts to an orbifold handle structure of M_N, then induces a handle structure of N. We may abuse the notation between M_N and N, when the orbifold structure is not important in the context.

Suppose $M_N \to M_0$ is a d-sheet orbifold cover, then the induced handle structure of N has d 0-handles, $6d$ 1-handles and k 2-handles. Here the relation between d and k depends on the geometric behavior of the orbifold covering map $M_N \to M_0$ along the singular set. Actually, $\frac{15}{2}d \leq k \leq 12d$ holds. Those six 2-handles of M_0 that do not intersect with the singular set lift to $6d$ 2-handles of N. For each of those six 2-handles intersecting with the singular set, the number of the components of its preimage is between $\frac{d}{4}$ and d.

Let Y be the preimage of X in N, then the finite sheet branched cover $Y \to X$ is also of degree d. Y has d 0-cells (correspond with 0-handles of N), $6d$ 1-cells (correspond with 1-handles of N), k circles, k 2-cells and k cornered annuli (correspond with 2-handles of N). Here the cornered annuli might be four-cornered, two-cornered or one-cornered, depending on the branched index. Moreover, all of these three possibilities do happen, by Theorem 1.1 of [17].

Here Y is a deformation retract of $N^{(2)}$. Let Y' be the intersection of Y with $N^{(1)}$, which excludes all the 2-cells in Y, then $Y' \cap \partial N^{(1)}$ is the disjoint union of k circles where the 2-handles of N are attached.

4.3 Construction of an immersed π_1-injective 2-complex

In this section, for any closed hyperbolic 3-manifold M, we will construct an immersed π_1-injective 2-complex $j : Z \looparrowright M$, where the 2-complex Z is related to the handle structure of N, and contains two copies of Y' as its subcomplex.

In the following part of this chapter, all the tangent vectors will be unit vectors, if there is no specific description. For any point $p \in M$, we use T^1_pM to denote the set of all unit tangent vectors at p. For any two vectors $\vec{v}_1, \vec{v}_2 \in T^1_pM$ for some $p \in M$, we use $\Theta(\vec{v}_1, \vec{v}_2) \in [0, \pi]$ to denote the angle between $\vec{v}_1$ and $\vec{v}_2$.

At first, we need to introduce the *connection principle* (see Lemma 4.15 in [25]). For technical reason, we use a slightly different statement from Lemma 4.15 of [25]. It follows from the exponential mixing property of frame flow (Theorem 2.1.5), see [44].

Lemma 4.3.1. *(Connection Principle) For any closed hyperbolic 3-manifold M and any small number $0 < \delta < 1$, there exists a constant $L_0(\delta, M) > 0$, such that the following statement holds. Let $\vec{t}_p, \vec{n}_p \in T^1_pM$ and $\vec{t}_q, \vec{n}_q \in T^1_qM$ be two pairs of unit orthonormal vectors at $p, q \in M$ respectively. For any real number $L > L_0(\delta, M)$, there exists an oriented geodesic arc γ from p to q, such that the following conditions hold.*

- *The initial and terminal tangent vectors of γ at p and q are $\frac{\delta}{L}$-close to $\vec{t}_p$ and $\vec{t}_q$ respectively.*
- *The length of γ is $\frac{\delta}{L}$-close to L.*
- *The angle between $\vec{n}_q$ and the parallel transportation of $\vec{n}_p$ to q along γ is $\frac{\delta}{L}$-close to 0.*

Remark 4.3.2. *We also assume that* $10000L_0(\delta, M)e^{-\frac{L_0(\delta,M)}{16}} < \delta$ *and* $L_0(\delta, M) > 10000$ *hold, for the convenience of further estimations.*

Now we can construct null-homologous geodesic arcs with a base point in any hyperbolic 3-manifold, which is a basic step of our construction.

Lemma 4.3.3. *For any small number* $0 < \delta < 1$*, there exists* $L_1(\delta, M) > 0$*, such that for any real number* $L > L_1(\delta, M)$*, the following statement holds. Let* p *be a point in* M*,* $\vec{v}_1, \vec{v}_2$ *be two unit vectors in* T^1_pM*, and* $\vec{n} \in T^1_pM$ *be another unit vector orthogonal with both* $\vec{v}_1$ *and* $\vec{v}_2$*. Then there exists an oriented geodesic arc* γ *based at* p*, such that the following conditions hold.*

- *The initial and terminal tangent vectors of* γ *at* p *are* $\frac{\delta}{L}$*-close to* $\vec{v}_1$ *and* $\vec{v}_2$ *respectively.*
- *The length of* γ *is* $\frac{\delta}{L}$*-close to* L*.*
- *The angle between* $\vec{n}$ *and the parallel transportation of* $\vec{n}$ *to* p *along* γ *is* $\frac{\delta}{L}$*-close to* 0*.*
- *As a closed curve in* M*,* $[\gamma] = 0 \in H_1(M; \mathbb{Z})$*.*

Proof. Choose two auxiliary unit vectors $\vec{v}_1', \vec{v}_2' \in T^1_pM$ orthogonal with $\vec{n}$, such that the angles $\theta_1 = \Theta(\vec{v}_1, \vec{v}_2')$, $\theta_2 = \Theta(\vec{v}_2', -\vec{v}_1')$ and $\theta_3 = \Theta(-\vec{v}_1', \vec{v}_2)$ are all in $[0, \frac{\pi}{3}]$.

Now we take $L_1(\delta, M) = 4L_0(\frac{\delta}{100}, M)$. By applying the connection principle (Lemma 4.3.1), we get two oriented geodesic arcs α and β in M based at p such that the following conditions hold.

- The initial and terminal tangent vectors of α are $\frac{\delta}{100}/\frac{L}{4} = \frac{\delta}{25L}$-close to $\vec{v}_1$ and $\vec{v}_1'$ respectively, while the initial and terminal tangent vectors of β are $\frac{\delta}{25L}$-close to $-\vec{v}_2$ and $\vec{v}_2'$ respectively.
- The length of α and β are $\frac{\delta}{25L}$-close to $\frac{L}{4}$ and $\frac{L}{4} + \sum_{i=1}^{3} \log(\sec\frac{\theta_i}{2})$ respectively.

- The angle between $\vec{n}$ and the parallel transportation of $\vec{n}$ to p along α is $\frac{\delta}{25L}$-close to 0, and so does the angle between $\vec{n}$ and the parallel transportation of $\vec{n}$ to p along β.

Here $\log(\sec\frac{\theta}{2})$ shows up since $I(\theta) = 2\log(\sec\frac{\theta}{2})$ is the inefficiency constant given by exterior angle θ (see [19] Section 4.1).

Let γ be the geodesic arc homotopic to $\alpha\beta\bar{\alpha}\bar{\beta}$ with respect to the base point p. By applying the estimations in Lemma 4.8 of [25] and Remark 4.3.2, we can see that γ satisfies the first three conditions in the statement. The fourth condition clearly holds since γ is a commutator in $\pi_1(M,p)$. □

Remark 4.3.4. *By Remark 4.3.2, it is easy to check that* $10000L_1(\delta,M)e^{-\frac{L_1(\delta,M)}{64}} < \delta$ *and* $L_1(\delta,M) > 10^4$ *holds.*

Let $\theta_0 = \arcsin\sqrt{\frac{5-\sqrt{5}}{10}}$, then $\theta_0 \approx 0.1762\pi \approx 31.7175°$. Let $\vec{n}_1$ and $\vec{n}_2$ be two normal vectors of two adjacent faces of the Euclidean regular dodecahedron (pointing outside), then the angle between $\vec{n}_1$ and $\vec{n}_2$ equals $2\theta_0$.

Now we can do the first step our construction. For any closed oriented hyperbolic 3-manifold M, take an arbitrary point $p \in M$, and choose an orthonormal frame $(\vec{e}_1,\vec{e}_2,\vec{e}_3)$ in T_pM such that $(\vec{e}_1,\vec{e}_2,\vec{e}_3)$ coincides with the orientation of M (i.e. $\vec{e}_3 = \vec{e}_1 \times \vec{e}_2$). Then for any $\vec{v} \in T_pM$, $\vec{v}$ can be written as a linear combination of $\vec{e}_1$, $\vec{e}_2$ and $\vec{e}_3$, as $\vec{v} = v_1\vec{e}_1 + v_2\vec{e}_2 + v_3\vec{e}_3$. In this case, we will use $\vec{v} = (v_1,v_2,v_3)$ to denote the coordinate of $\vec{v}$.

Let

$$\vec{v}_a = (\sin\theta_0, 0, \cos\theta_0), \quad \vec{v}_b = (\sin\theta_0, 0, -\cos\theta_0),$$
$$\vec{v}_c = (0, \cos\theta_0, \sin\theta_0), \quad \vec{v}_d = (0, -\cos\theta_0, \sin\theta_0),$$
$$\vec{v}_e = (\cos\theta_0, \sin\theta_0, 0), \quad \vec{v}_f = (-\cos\theta_0, \sin\theta_0, 0)$$

be six unit vectors in T_p^1M. These six vectors together with the negative vectors of them form the twelve normal vectors of the twelve faces of the Euclidean regular

dodecahedron in T_pM. Figure 3 shows a picture of these vectors, with $\vec{e}_1$ normal to the front face of the cube, $\vec{e}_2$ normal to the right face, and $\vec{e}_3$ normal to the top face, while all these three vectors are pointing outside of the cube.

Now we apply Lemma 4.3.3 to construct six closed oriented geodesic arcs a, b, c, d, e, f based at p. They correspond with the six generators in the group presentation (4.1) (we abuse the notation between generators and geodesic arcs). For our application of Lemma 4.3.3, the constant $\delta > 0$ will be some very small number and $L > L_1(\delta, M)$ will be some very large number which will be determined later. These six geodesic arcs are constructed according to the data in Table 1. Here $\vec{v}_1$, $\vec{v}_2$ and $\vec{n}$ in Table 1 are the input data of Lemma 4.3.3, and geodesic arcs a, b, c, d, e, f are the output data. $\vec{n}$ is called an *almost normal vector* of the corresponding geodesic arc at its initial and terminal point.

geodesic arc	$\vec{v}_1$	$\vec{v}_2$	$\vec{n}$
a	$\vec{v}_a$	$\vec{v}_b$	$(0,1,0)$
b	$\vec{v}_b$	$\vec{v}_a$	$(0,1,0)$
c	$\vec{v}_c$	$\vec{v}_d$	$(1,0,0)$
d	$\vec{v}_d$	$\vec{v}_c$	$(1,0,0)$
e	$\vec{v}_e$	$\vec{v}_f$	$(0,0,1)$
f	$\vec{v}_f$	$\vec{v}_e$	$(0,0,1)$

Table 4.1: Construction of geodesic arcs.

Given this construction, we have the following estimation for closed geodesics in M. These closed geodesics are related with the words in the group presentation (4.1).

Lemma 4.3.5. *For any positive integer n, the concatenation of n geodesic arcs corresponding with a^n is homotopic to a null-homologous closed geodesic in M, with complex length $\frac{25n\delta}{L}$-close to $n(L - 2\log\csc\theta_0)$. The same statement also holds for b, c, d, e, f.*

For each of the twelve relators in the group presentation (4.1)*, the concatenation of the four corresponding geodesic arcs is homotopic to a null-homologous closed geodesic in M, with complex length $\frac{100\delta}{L}$-close to $4(L - 2\log\csc\theta_0)$.*

Proof. We will only prove the lemma for a^n and $acb^{-1}c^{-1}$, and the proof for the other words are exactly the same. These closed geodesics are clearly null-homologous in M, since all the geodesic arcs a, b, c, d, e, f based at p are null-homologous, by Lemma 4.3.3.

1) Proof for a^n: By the construction of the geodesic arc a, the initial and terminal tangent vectors of a at p are $\frac{\delta}{L}$-close to $\vec{v}_a$ and $\vec{v}_b$ respectively, and the parallel transportation of the almost normal vector $(0, 1, 0)$ along a is $\frac{\delta}{L}$-close to $(0, 1, 0)$.

Then Lemma 4.8 of [25] and Remark 4.3.4 imply the desired estimation.

2) Proof for $acb^{-1}c^{-1}$: In this case, the almost normal vectors in Table 1 of adjacent oriented geodesic arcs, say a and c, do not coincide. So we need to choose new almost normal vectors at the initial and terminal points of a, c, b^{-1} and c^{-1} respectively, such that adjacent geodesic arcs share the same almost normal vector at their intersection point.

Since the parallel transportation of $\vec{v}_a = (\sin\theta_0, 0, \cos\theta_0)$ and $(0, 1, 0)$ to p along a are $\frac{\delta}{L}$-close to $\vec{v}_b = (\sin\theta_0, 0, -\cos\theta_0)$ and $(0, 1, 0)$ respectively, the parallel transportation of $(\frac{\sqrt{5}+1}{4}, \frac{\sqrt{5}-1}{4}, -\frac{1}{2})$ to p along a is $\frac{4\delta}{L}$-close to $(-\frac{\sqrt{5}+1}{4}, \frac{\sqrt{5}-1}{4}, -\frac{1}{2})$. This estimation holds because

$$(\frac{\sqrt{5}+1}{4}, \frac{\sqrt{5}-1}{4}, -\frac{1}{2}) = \sqrt{\frac{5+\sqrt{5}}{8}}(0, 1, 0) \times \vec{v}_a + \frac{\sqrt{5}-1}{4}(0, 1, 0)$$

and

$$(-\frac{\sqrt{5}+1}{4}, \frac{\sqrt{5}-1}{4}, -\frac{1}{2}) = \sqrt{\frac{5+\sqrt{5}}{8}}(0, 1, 0) \times \vec{v}_b + \frac{\sqrt{5}-1}{4}(0, 1, 0).$$

Here $(\frac{\sqrt{5}+1}{4}, \frac{\sqrt{5}-1}{4}, -\frac{1}{2})$ is orthogonal with both $-\vec{v}_c$ and $\vec{v}_a$, while $(-\frac{\sqrt{5}+1}{4}, \frac{\sqrt{5}-1}{4}, -\frac{1}{2})$ is orthogonal with both $\vec{v}_b$ and $\vec{v}_c$.

By the same argument, applied to c, b^{-1} and c^{-1} respectively, we have the following estimations.

- The parallel transportation of $(-\frac{\sqrt{5}+1}{4}, \frac{\sqrt{5}-1}{4}, -\frac{1}{2})$ to p along c is $\frac{4\delta}{L}$-close to $(-\frac{\sqrt{5}+1}{4}, \frac{\sqrt{5}-1}{4}, \frac{1}{2})$.
- The parallel transportation of $(-\frac{\sqrt{5}+1}{4}, \frac{\sqrt{5}-1}{4}, \frac{1}{2})$ to p along b^{-1} is $\frac{4\delta}{L}$-close to $(\frac{\sqrt{5}+1}{4}, \frac{\sqrt{5}-1}{4}, \frac{1}{2})$.
- The parallel transportation of $(\frac{\sqrt{5}+1}{4}, \frac{\sqrt{5}-1}{4}, \frac{1}{2})$ to p along c^{-1} is $\frac{4\delta}{L}$-close to $(\frac{\sqrt{5}+1}{4}, \frac{\sqrt{5}-1}{4}, -\frac{1}{2})$.

Now for each geodesic arc of the piecewise geodesic path $acb^{-1}c^{-1}$, it is equipped with new almost normal vectors at the initial and terminal points, such that adjacent oriented arcs share the same almost normal vector at their intersection point. So we can apply Lemma 4.8 of [25] and Remark 4.3.4 again to get the desired estimation. □

Remark 4.3.6. *For any two adjacent oriented geodesic arcs in $acb^{-1}c^{-1}$, the tangent vector of the second geodesic arc at its initial point is $\frac{2\delta}{L}$-close with the $\pi-2\theta_0$ clockwise rotation (about the common almost normal vector constructed in Lemma 4.3.5) of the tangent vector of the first geodesic arc at its terminal point. This property guarantees that the corresponding four-cornered annulus in X' can be immersed into M with an almost totally geodesic subsurface as its image, such that one boundary component of the annulus is mapped to the piecewise geodesic closed path $acb^{-1}c^{-1}$, and the other boundary component is mapped to the corresponding closed geodesic in M.*

The readers can imagine the case that the picture appears exactly on a hyperbolic surface. If those four "turns" are not all left turn (or all right turn), the four-cornered annulus can not be immersed into the hyperbolic surface, since the piecewise geodesic closed path and the closed geodesic may intersect with each other essentially.

Now let $\delta = \frac{\epsilon}{400}$ and $L = \cosh^{-1}(\frac{\cosh R+\cos^2\theta_0}{\sin^2\theta_0}) = R + 2\log(\csc\theta_0) + O(e^{-R})$ as our input data. Here $\epsilon > 0$ is so small and $R > 0$ is so large, such that Corollary

2.3.3, Theorem 6.1.1 and Theorem 6.2.3 hold for (R, ϵ). Moreover, we also require that Lemma 4.3.3 and Remark 4.3.4 hold for (L, δ). Then Lemma 4.3.5 implies that all those twelve closed geodesics in M corresponding with the twelve relators in the group presentation (4.1) lie in $\mathbf{\Gamma}_{4R,\frac{\epsilon}{4R}}$. Actually, if all the $\frac{\delta}{L}$-closeness conditions in Lemma 4.3.3 can be replaced by exact (0-closeness) conditions, then all those twelve closed geodesics have complex length exactly equal to $4R$.

Now we are ready to construct an immersed π_1-injective 2-complex $j : Z \looparrowright M$, under the hint of the handle structure of N. Here we divide the construction into a few steps.

Step I. Recall that, by the end of Section 4.2, we have constructed a 2-complex X' in M_0, which consists of one 0-cell, six 1-cells, twelve circles, six four-cornered annuli and six one-cornered annuli. The preimage of X' in N is a 2-complex Y', here Y' a d-sheet cover of X' and is a deformation retract of $N^{(1)}$. Moreover, $Y' \cap \partial N^{(1)}$ is exactly the union of k disjoint circles on $\partial N^{(1)}$ where the 2-handles of N are attached.

Now we construct an immersion $j' : X' \looparrowright M$ to any closed hyperbolic 3-manifold M by the following way.

Let the 0-cell of X' be mapped to the point $p \in M$ which we have already chosen. Let the six oriented 1-cells of X' (correspond with the six generators a, b, c, d, e, f in the group presentation (4.1)) be mapped to the six corresponding oriented geodesic arcs in M based at p, by applying Lemma 4.3.3 to the data in Table 1. Let the twelve circles in X' be mapped to twelve closed geodesics in M, which are homotopic to the corresponding concatenation of geodesic arcs. Six of them correspond with the first six relators in the group presentation (4.1), and the remaining six of them correspond with a quarter of the remaining six relators. For example, one of them is mapped to the closed geodesic in M which is homotopic to the closed geodesic arc e, instead of e^4. Lemma 4.3.5 implies that the first six closed geodesics lie in $\mathbf{\Gamma}_{4R,\frac{\epsilon}{4R}}$, and the remaining six lie in $\mathbf{\Gamma}_{R,\frac{\epsilon}{R}}$.

For the four-cornered annuli (one-cornered annuli) in X', we may subdivide them in the following way. First add an arc from each corner point to its opposite circle, to divide the annuli into four (one) 4-gons. Then add a diagonal to each 4-gon to divide it to two triangles.

Then the arcs from the corner points to the opposite circle are mapped to the geodesic arcs in the correct homotopic class which has initial point p and perpendicular with the corresponding closed geodesic in M. For the remaining part of the cornered annuli, j' maps arcs to geodesic arcs, and map triangles to totally geodesic triangles. By Remark 4.3.6, the image of these cornered annuli are almost totally geodesic subsurfaces in M.

Step II. $j' : X' \looparrowright M$ induces an immersion $j'' : Y' \looparrowright M$, by take the composition of j' and the finite sheet cover from Y' to X'. Y' consists of d 0-cells, $6d$ 1-cells, k circles and k cornered annuli. Moreover, Theorem 4.1.1 and Lemma 4.3.5 imply that all the circles in Y' are mapped to closed geodesics in $\mathbf{\Gamma}_{4R,\frac{\epsilon}{4R}}$, $\mathbf{\Gamma}_{2R,\frac{\epsilon}{2R}}$ or $\mathbf{\Gamma}_{R,\frac{\epsilon}{R}}$. We denote these circles in Y' by $C_1, \cdots, C_k$ and their images under j'' by $\gamma_1, \cdots, \gamma_k$. For each C_i, we give it an arbitrary orientation, and it induces an orientation on γ_i. Lemma 4.3.5 also implies that γ_i is null-homologous in M for $i = 1, \cdots, k$.

Step III. For each circle $C_i \subset Y'$ which lies in a cornered annulus, in the subdivision of Y' induced by the subdivision of X', there are a few (one, two or four) arcs from the corner points to C_i. By the construction of $j' : X' \looparrowright M$, j'' maps these arcs to geodesic arcs perpendicular with γ_i. We choose an arbitrary such geodesic arc for each γ_i, and denote it by α_i. We denote the intersection between α_i and γ_i by p_i, and denote the unit tangent vector of α_i at p_i by $\vec{u}_i$ (pointing to p_i). Let $\vec{v}_i$ be the unit normal vector of γ_i which is the $1 + \pi i$ shearing of $\vec{u}_i$ along γ_i.

Note that $C_i \subset Y'$ is a boundary component of an r_i-cornered annulus. Now we apply Corollary 2.3.3 to $L_i = \gamma_i \sqcup \gamma_i$, the union of two copies of γ_i, then $L_i \in \mathbb{Z}\mathbf{\Gamma}_{r_iR,\frac{\epsilon}{r_iR}}$ for $r_i \in \{1, 2, 4\}$. Since $\sigma(\gamma_i) \in \mathbb{Z}_2$, we have $\sigma(L_i) = \bar{0} \in \mathbb{Z}_2$. So Corollary 2.3.3 implies

that L_i bounds an immersed oriented $(r_iR, \frac{\epsilon}{r_iR})$-almost totally geodesic subsurface $f_i : S_i \looparrowright M$, such that the two pair of pants in S_i containing the two boundary components of S_i both have one foot which is $\frac{\epsilon}{(r_iR)^2}$-close to $\vec{v}_i$. Since we can suppose S_i does not have closed surfaces as it connected components, there are two possibilities for S_i. S_i is either a connected surface with two boundary components, or the union of two connected surfaces, and each of them has one boundary component. Actually, the second possibility does not always happen. For example, for the closed geodesic γ_j corresponds with e^4 (which exists by Theorem 1.1 of [17]), its canonical lifting goes around some closed curve in $SO(M)$ for four times, then do a 2π-counterclockwise rotation about some vector. So $\sigma(\gamma_j) = \bar{1}$, and Corollary 2.3.3 implies that γ_j itself does not bound an immersed $(4R, \frac{\epsilon}{4R})$-almost totally geodesic subsurface in M. So S_j is a connected surface in this case.

Step IV. By applying the surgery argument as in Section 3.1, we can suppose that each S_i satisfies the following property. Endow S_i with the hyperbolic metric such that each curve in the pants decomposition of S_i has length exactly r_iR, and the shearing parameter is exactly 1, then any essential arc $(I, \partial I) \to (S_i, \partial S_i)$ has length greater than $\frac{R}{2}$.

Now we can define our desired 2-complex Z, which is the quotient space of the union of two copies of Y' (denoted by Y'_1 and Y'_2) and $\{S_i\}_{i=1}^k$. For each S_i, the two boundary components of S_i are pasted to the two copies of C_i in Y'_1 and Y'_2 respectively, by orientation preserving homeomorphisms. Then $j'' : Y' \looparrowright M$ and $f_i : S_i \looparrowright M$ induce the desired immersion $j : Z \looparrowright M$, with induced map $j_* : \pi_1(Z) \to \pi_1(M)$. In the construction of the desired degree-2 map, the union of Y'_1 and Y'_2 will correspond with $N^{(1)}$, and the union of S_i will correspond with the 2-handles of N.

Let $\rho_0 : \pi_1(Z) \to PSL_2(\mathbb{C})$ be the representation such that all the $\frac{\epsilon}{R}$- and $\frac{\epsilon}{R^2}$-closeness statements appeared in $j_* : \pi_1(Z) \to \pi_1(M) \subset PSL_2(\mathbb{C})$ are replaced by exact (0-closeness) statements. As an algebraic object, $\rho_0 : \pi_1(Z) \to PSL_2(\mathbb{C})$ is

accompanied with a map $i_0 : \widetilde{Z} \to \mathbb{H}^3$ from the universal cover $p : \widetilde{Z} \to Z$ of Z to $\mathbb{H}^3$. The map $i_0 : \widetilde{Z} \to \mathbb{H}^3$ is a geometric object which carries the algebraic information of $\rho_0 : \pi_1(Z) \to PSL_2(\mathbb{C})$. The image $i_0(\widetilde{Z})$ is a union of totally geodesic subsurfaces in $\mathbb{H}^3$, pasted along a union of geodesic arcs. More precisely, $i_0 : \widetilde{Z} \to \mathbb{H}^3$ is defined by the following conditions, which also gives the precise definition of $\rho_0 : \pi_1(Z) \to PSL_2(\mathbb{C})$.

Construction 4.3.7.

- *For each 0-cell x in $\widetilde{Z}$, it is associated with an orthonormal frame $(\vec{e}_1, \vec{e}_2, \vec{e}_3)$ at $i_0(x)$ which coincides with the orientation of $\mathbb{H}^3$.*

- *For each 1-cell t in $\widetilde{Z}$, it is endowed with an orientation such that the oriented 1-cell $p(t)$ in Z corresponds with one of the oriented 1-cell a, b, c, d, e, f in X'. Suppose t travels from one 0-cell x to another 0-cell y in $\widetilde{Z}$, let $(\vec{e}_1, \vec{e}_2, \vec{e}_3)$ and $(\vec{e}'_1, \vec{e}'_2, \vec{e}'_3)$ be the two orthonormal frames at $i_0(x)$ and $i_0(y)$ respectively, then the following conditions hold.*

  - *$i_0(t)$ is a geodesic arc from $i_0(x)$ to $i_0(y)$ with length equal to L.*
  - *The tangent vectors of $i_0(t)$ at $i_0(x)$ and $i_0(y)$ are exactly the corresponding vectors $\vec{v}_1$ and $\vec{v}_2$ in Table 1 respectively (under the coordinate given by orthonormal frames $(\vec{e}_1, \vec{e}_2, \vec{e}_3)$ and $(\vec{e}'_1, \vec{e}'_2, \vec{e}'_3)$).*
  - *The parallel transportation of $(\vec{e}_1, \vec{e}_2, \vec{e}_3)$ to $i_0(y)$ along $i_0(t)$ is equal to the counterclockwise $\pi - 2\theta_0$ rotation of $(\vec{e}'_1, \vec{e}'_2, \vec{e}'_3)$ about a vector $\vec{n} \in T^1_{i_0(y)}(M)$. Here*

$$\vec{n} = \begin{cases} \vec{e}'_2 & \text{if } p(t) \text{ corresponds with } a \text{ in } X', \\ -\vec{e}'_2 & \text{if } p(t) \text{ corresponds with } b \text{ in } X', \\ \vec{e}'_1 & \text{if } p(t) \text{ corresponds with } c \text{ in } X', \\ -\vec{e}'_1 & \text{if } p(t) \text{ corresponds with } d \text{ in } X', \\ \vec{e}'_3 & \text{if } p(t) \text{ corresponds with } e \text{ in } X', \\ -\vec{e}'_3 & \text{if } p(t) \text{ corresponds with } f \text{ in } X'. \end{cases} \tag{4.2}$$

- *For any component of the preimage of a circle in the pants decomposition of some S_i, it is mapped to a bi-infinite geodesic in $\mathbb{H}^3$.*

- *For any component of the preimage of a four-cornered annulus in Z, it is mapped to a totally geodesic subsurface in $\mathbb{H}^3$ with two boundary components. One of its boundary component is a concatenation of geodesic arcs of length L, and the other boundary component is a bi-infinite geodesic. Moreover, these two boundary components share the same limit points on $\partial\mathbb{H}^3 = S^2_\infty$.*

- *For any arc in $\widetilde{Z}$ which is a component of the preimage of either a seam in a pair of pants, or an arc in a cornered annulus from a corner point to the opposite circle, its image under i_0 is a geodesic arc perpendicular with the corresponding bi-infinite geodesics.*

- *For any circle C in the oriented surface S_i which is the boundary of a pair of pants Π, we have $\mathbf{hl}_\Pi(C) = \frac{r_i R}{2}$. Here $\mathbf{hl}_\Pi(C) = \frac{r_i R}{2}$ means the following statement holds. Take any bi-infinite line $\beta \subset \widetilde{Z}$ which is a component of $p^{-1}(C)$, and any two arcs α and α' in $\widetilde{Z}$ that intersect with β and project to two seams of $\Pi \subset S_i$, such that there is no other such arc between α and α' along β. Then the tangent vector of $i_0(\alpha)$ is the $\frac{r_i R}{2}$ translation of the tangent vector of $i_0(\alpha')$ along $i_0(\beta)$ (under properly chosen orientation).*

- *For any oriented circle C shared by two pants Π and Π' in S_i, such that Π lies to the left of C, we have $s(C) = 1$. Here $s(C) = 1$ means the following statement holds. Take any bi-infinite line $\beta \subset \widetilde{Z}$ which is a component of $p^{-1}(C)$, and any arc α in $\widetilde{Z}$ that intersects with β and projects to a seam of Π. Let α' be the arc that intersects with β and projects to a seam of Π', such that $i_0(\alpha')$ is the nearest such arc from $i_0(\alpha)$. Then the tangent vector of $i_0(\alpha)$ is the $1 + \pi i$ translation of the tangent vector of $i_0(\alpha')$ along $i_0(\beta)$.*

- *For any oriented boundary component C_i of S_i which is the cuff of a pair of pants $\Pi \subset S_i$, in step III of the construction of $j : Z \to M$, we have chosen an arc α_i which travels from some 0-cell of Z to C_i. Take any bi-infinite line $\beta \subset \widetilde{Z}$ which is a component of $p^{-1}(C_i)$, and any arc α in $\widetilde{Z}$ that intersects with β and projects to α_i. Let α' be the arc that intersects with β and projects to a seam of Π, such that $i_0(\alpha')$ is the nearest such arc from $i_0(\alpha)$. Then the tangent vector of $i_0(\alpha)$ is the $1 + \pi i$ translation of the tangent vector of $i_0(\alpha')$ along $i_0(\beta)$.*

- *For any component of the preimage of a pair of pants in S_i, it is mapped to a totally geodesic subsurface in $\mathbb{H}^3$.*

Then $\rho_0 : \pi_1(Z) \to PSL_2(\mathbb{C})$ can be defined by: for any $z \in \widetilde{Z}$, and any $g \in \pi_1(Z)$, $\rho_0(g)(i_0(z)) = i_0(g(z))$ holds. In this case, the frames at the images of 0-cells are also $\pi_1(Z)$-equivariant.

Although this construction is very long, it is simply describing a 2-complex $\widetilde{Z}$ in $\mathbb{H}^3$ which is the union of totally geodesic subsurfaces, pasted along an 1-dimensional complex consisting of long geodesic arcs. The map $i_0 : \widetilde{Z} \to \mathbb{H}^3$ will serve as our standard model of its algebraic counterpart $\rho_0 : \pi_1(Z) \to PSL_2(\mathbb{C})$. We will study geometric properties of the deformations of i_0, which gives us algebraic properties of small deformations of ρ_0. In particular, it will show that $j_* : \pi_1(Z) \to \pi_1(M) \subset PSL_2(\mathbb{C})$ is injective.

The map $i_0 : \widetilde{Z} \to \mathbb{H}^3$ induces a path metric on $\widetilde{Z}$, which is denoted by d_0. Then an argument in hyperbolic geometry gives the following result, which will be shown in Chapter 6.

Proposition 4.3.8. *When R is large enough, $i_0 : (\widetilde{Z}, d_0) \to (\mathbb{H}^3, d_{\mathbb{H}^3})$ is a embedding and also a quasi-isometric embedding. In particular, $\rho_0 : \pi_1(Z) \to PSL_2(\mathbb{C})$ is an injective map.*

The following result claims that a small deformation of ρ_0 is still π_1-injective. It is shown by geometric estimation on the associated map $i : \widetilde{Z} \to \mathbb{H}^3$ of $j_* : \pi_1(Z) \to PSL_2(\mathbb{C})$.

Theorem 4.3.9. *When $\epsilon > 0$ is small enough and $R > 0$ is large enough, the map $j : Z \looparrowright M$ induces an injective map $j_* : \pi_1(Z) \hookrightarrow \pi_1(M)$, and $j_*(\pi_1(Z)) \subset \pi_1(M)$ is a geometric finite subgroup. Moreover, $\mathbb{H}^3/j_*(\pi_1(Z))$ is homeomorphic to $\mathbb{H}^3/\rho_0(\pi_1(Z))$ with respect to their orientations.*

The intuitive reason of Theorem 4.3.9 is quite simple. Since j_* is a small deformation of ρ_0, $j_*(\pi_1(Z))$ should share geometrical and topological properties with $\rho_0(\pi_1(Z))$ (as in [20]). We will give more precise description of the deformations of $\rho_0 : \pi_1(Z) \to PSL_2(\mathbb{C})$ in Chapter 6, and the proof of Theorem 4.3.9 will also be delayed to Chapter 6. The main reason is, although this result is very intuitive, the geometric estimation is technical. We do not want these technical stuff to distract the readers from the main idea of the proof of Theorem 1.2.5.

4.4 Construction of domination

In this section, we will prove Theorem 1.2.5, by assuming Proposition 4.3.8 and Theorem 4.3.9. Theorem 1.2.5 claims that, for any closed oriented hyperbolic 3-manifold M, and any closed oriented 3-manifold N, M admits a finite cover M', such that there exists a degree-2 map $f : M' \to N$.

To prove Theorem 1.2.5, we first need to figure out the topology of $\mathbb{H}^3/\rho_0(\pi_1(Z))$.

Let H be the oriented handlebody which is homeomorphic to $N^{(1)}$ (the union of 0- and 1-handles of N), and we fix such an orientation-preserving identification. There are k disjoint annuli $A_1, \cdots, A_k$ on $\partial N^{(1)}$, where the k 2-handles of N are attached. We abuse notation and still use $A_1, \cdots, A_k$ to denote the corresponding k disjoint annuli on ∂H. Take two copies of H and denote them by H_1 and H_2. We also denote

the corresponding annuli of A_i on ∂H_1 and ∂H_2 by $A_{i,1}$ and $A_{i,2}$ respectively. Here H_j and $A_{i,j}$ are all endowed with the identical orientations as H and A_i.

Now we take k I-bundles over surfaces: $S_1 \times I, \cdots, S_k \times I$, these S_i's are the oriented surfaces constructed in step III of the construction of Z. Since the boundary of S_i has two oriented components $C_{i,1}$ and $C_{i,2}$, the boundary of $S_i \times I$ contains two disjoint annuli $C_{i,1} \times I$ and $C_{i,2} \times I$, such that the product orientations on $C_{i,1} \times I$ and $C_{i,2} \times I$ coincide with their induced orientation from $S_i \times I$.

Let $j_i : A_{i,1} \to A_{i,2}$ be the orientation preserving homeomorphism of the two annuli give by the identification between H_1 and H_2. Let $k_i : C_{i,1} \times I \to C_{i,2} \times I$ be an orientation preserving homeomorphism which also preserves the orientation of the I-factor. For each $i \in \{1, \cdots, k\}$, we take an orientation reversing homeomorphism $\phi_i : C_{i,1} \times I \cup C_{i,2} \times I \to A_{i,1} \cup A_{i,2}$ which maps $C_{i,1} \times I$ to $A_{i,1}$ and maps $C_{i,2} \times I$ to $A_{i,2}$, such that

$$j_i \circ \phi_i|_{C_{i,1} \times I} = \phi_i|_{C_{i,2} \times I} \circ k_i.$$

Let

$$K = (H_1 \cup H_2) \bigcup_{\{\phi_i\}_{i=1}^k} (\bigcup_{i=1}^k S_i \times I).$$

Then by the construction of $i_0 : \widetilde{Z} \to \mathbb{H}^3$ in Construction 4.3.7, it is easy to see that $\mathbb{H}^3/\rho_0(\pi_1(Z))$ is homeomorphic with $int(K)$, with respect to their orientations. Actually, each boundary component of K is incompressible.

Let $Z^{(1)}$ be the union of 0-cells and 1-cells in Z, $\widetilde{Z}^{(1)}$ be the preimage of $Z^{(1)}$ in $\widetilde{Z}$, and $N(\widetilde{Z}^{(1)})$ be a small neighborhood of $i_0(\widetilde{Z}^{(1)})$ in $\mathbb{H}^3$. Then an important point is, $N(\widetilde{Z}^{(1)})/\rho_0(\pi_1(Z))$ is homeomorphic to two copies of $N^{(1)}$, and $(\partial N(\widetilde{Z}^{(1)}) \cap i_0(\widetilde{Z}))/\rho_0(\pi_1(Z))$ correspond with the disjoint union of circles on the two copies of $\partial N^{(1)}$, where the 2-handles of N are attached.

The above observations hold since the handle structure on N and our construction of $Z \looparrowright M$ both follow the geometry of the regular icosahedron, and may not hold if we start with an arbitrary handle structure of N.

Here is a simple lemma on constructing non-zero degree maps.

Lemma 4.4.1. *If M' is a closed oriented 3-manifold which contains a compact codimension-0 submanifold K, such that there exists a proper degree-d map $h : (K, \partial K) \to (N^{(2)}, \partial N^{(2)})$. Then there is a degree-d map $f : M' \to N$, which is an extension of h.*

Proof. Since each component of $N \setminus N^{(2)}$ is a 3-handle, it has the 2-sphere as its boundary. So for each component Q of $M' \setminus int(K)$, $h|_{\partial Q}$ maps ∂Q to the disjoint union of a few 2-spheres. Suppose Q has q boundary components. Let $[q]$ be the topological space consists of q points with discrete topology, and let $\cup_{i=1}^{q} B_i^3$ be the disjoint union of q 3-balls. Then we use E_q to denote the mapping cone of $[q] \to \cup_{i=1}^{q} B_i^3$ which maps the ith point $i \in [q]$ to the center of B_i^3.

Now we can define a map $e : Q \to E_q$. On a collar neighborhood of ∂Q, $e|_{\partial Q \times I}$ is defined by

$$\partial Q \times I \xrightarrow{h|_{\partial Q} \times I} \cup_{i=1}^{q} S^2 \times I \to \cup_{i=1}^{q} B^3.$$

For the remaining part of Q, e maps it to the graph in E_q, which is the cone over q points. Then there is an obvious map from E_q to N, which maps the ith 3-ball in E_q to the corresponding 3-handle in N (whose boundary 2-sphere is the image of the ith boundary component of Q) by homeomorphism, and maps the $(q+1)$-vertex graph in E_q to a subgraph in N which is the union of q paths.

The composition of these two maps gives $f|_Q : Q \to N$, and $f|_K$ is defined to be equal to h. So we get a map $f : (M', K) \to (N, N^{(2)})$ such that $f|_K : K \to N^{(2)}$ is a proper degree-d map, and $f(M' \setminus K) \cap N^{(2)}$ is a 1-dimensional subcomplex in $N^{(2)}$. So

for any generic point $m \in int(N^{(2)})$, $f^{-1}(m) = h^{-1}(m)$, and the sums of local degrees are both equal to $\deg(h) = d$. So $f : M' \to N$ is a degree-d map. □

Now we are ready to prove Theorem 1.2.5.

Proof. For any closed hyperbolic 3-manifold M, we have already constructed an immersed π_1-injective 2-complex $j : Z \looparrowright M$, such that $\mathbb{H}^3/j_*(\pi_1(Z))$ is homeomorphic to $\mathbb{H}^3/\rho_0(\pi_1(Z))$, which is homeomorphic to $int(K)$, with respect to their orientations. Let $q : \bar{M} \to M$ be the infinite cover of M such that $q_*(\pi_1(\bar{M})) = j_*(\pi_1(Z))$, then $\bar{M}$ is homeomorphic to $int(K)$ with respect to their orientations. By shrinking the boundary of K into its interior a little bit, we get an embedding $\iota : K \hookrightarrow \bar{M}$, and $\iota(K)$ is a compact subset of $\bar{M}$.

Building on Wise's work ([46]), Agol showed that the groups of hyperbolic 3-manifolds are LERF ([3]). By Scott's equivalent formulation of LERF ([39]), there is an intermediate finite cover $M' \to M$ of $\bar{M} \to M$, such that $\iota(K) \subset \bar{M}$ projects into M' by homeomorphism. We still use K to denote the projection of $\iota(K)$ in M', since it is homeomorphic to K.

Now we need only to construct a proper degree-2 map $h : (K, \partial K) \to (N^{(2)}, \partial N^{(2)})$, then Lemma 4.4.1 implies that M' 2-dominates N.

$h|_{H_1 \cup H_2}$ maps H_1 and H_2 to $N^{(1)}$ by the identification between H and $N^{(1)}$, which is an orientation preserving trivial 2-sheet cover. Moreover, h maps $A_{i,1}$ and $A_{i,2}$ to A_i by orientation-preserving homeomorphisms.

For $K \setminus int(H_1 \cup H_2) = \cup(S_i \times I)$, each $S_i \times I$ is mapped to the ith 2-handle of $N^{(2)}$. Recall that $S_i \times I$ is pasted to $H_1 \cup H_2$ by an orientation reversing homeomorphism $\phi_i : C_{i,1} \times I \cup C_{i,2} \times I \to A_{i,1} \cup A_{i,2}$, and the ith 2-handle $D_i \times I$ of N is pasted to $N^{(1)}$ by an orientation reversing homeomorphism $\partial D_i \times I \to A_i$. Here we can assume the orientation of the image of ∂D_i and the orientation of the image of $C_{i,1}$ and $C_{i,2}$ on $\partial N^{(1)}$ coincide. Then there is a proper degree-2 map $p_i : S_i \to D_i$ such that $p_i|_{C_{i,1}} : C_{i,1} \to \partial D_i$ and $p_i|_{C_{i,2}} : C_{i,2} \to \partial D_i$ are orientation preserving

homeomorphisms. Here we can first pinch S_i to the wedge of two discs, then an obvious map to the disc can be defined. Now we define $h|_{S_i \times I} : S_i \times I \to D_i \times I$ by $p_i \times I$, which extends the definition of h on $H_1 \cup H_2$ to K. Then $h : (K, \partial K) \to (N^{(2)}, \partial N^{(2)})$ is a proper degree-2 map, by considering the preimage of any point in $int(H_1 \cup H_2)$. $\square$

Chapter 5

The π_1-injectivity of $X_p \looparrowright M$

This chapter is devoted to prove Theorem 3.2.1. Actually, we will show a π_1-injectivity theorem for more general immersed 2-complexes in closed 3-manifolds, which are built by pasting pair of pants.

5.1 A general formulation of the π_1-injectivity result

For a pair of pants P, let $\partial_k P, k = 1, 2, 3$ denote the three boundary components of P. Given finitely many pair of pants $\mathcal{P} = \{P_i\}_{i=1}^m$ and finitely many circles $\mathcal{C} = \{C_j\}_{j=1}^n$, by using these building blocks and some additional data, we will construct a 2-complex with a "pants decomposition".

Definition 5.1.1. *Suppose for each pair (i, k), for $i \in \{1, \cdots, m\}$ and $k \in \{1, 2, 3\}$, it is associated with a unique $j \in \{1, \cdots, n\}$ and a homeomorphism $f_{ik} : \partial_k P_i \to C_j$. For each $C \in \mathcal{C}$, supposed it is associated with a positive integer $d_C > 0$.*

Let $(\cup_{i=1}^m P_i) \cup (\cup_{j=1}^n C_j) \to X'$ be the quotient space quotient by the relation given by $\{\phi_{ik}\}$. Let X be the further quotient space of X' given by the $\frac{2\pi}{d_C}$-rotation on each $C \in \mathcal{C}$, and let $q : (\cup_{i=1}^m P_i) \cup (\cup_{j=1}^n C_j) \to X$ be the quotient map giving X.

For each circle $C \in \mathcal{C}$, let $D_C = d_C \cdot \#(\partial_k P_i$ mapped to $C)$. Let $\mathcal{C}_1 = \{C \in \mathcal{C} | D_C = 2, d_C = 1\}$ and $\mathcal{C}_2 = \{C \in \mathcal{C} | D_C > 2$ or $d_C > 1\}$. If $D_C > 1$ for each $C \in \mathcal{C}$, we say X is a 2-complex with a pants decomposition $(X, \mathcal{C}_1, \mathcal{C}_2)$.

Here curves in $\mathcal{C}_1$ are called *regular curves*, since each of these curves has a neighborhood in X homeomorphic to the annulus. Curves in $\mathcal{C}_2$ are called *singular curves*. We can also define a graph $G(X)$ from X as in Section 3.1, with vertices given by pants, and edges given by regular curves. In $G(X)$, all the vertices are trivalent except those vertices that correspond with the pants which are adjacent to singular curves, and $l(G(X))$ can also be defined similarly. Let $S(X) = \max\{D_j\}$ which measures the maximal singularity of X.

Definition 5.1.2. *We say a representation $\rho : \pi_1(X) \to PSL_2(\mathbb{C})$ is viable if the restriction of ρ one each pants in X is π_1-injective and for any two pants Π and Π' sharing $C \in \mathcal{C}$, $\mathbf{hl}_\Pi(C) = \mathbf{hl}_{\Pi'}(C)$ holds.*

Given a viable representation $\rho : \pi_1(X) \to PSL_2(\mathbb{C})$, for a singular curve $C \in \mathcal{C}_2$, let $N^1(\sqrt{C})$ be the half unit normal bundle of C (under ρ), then $N^1(\sqrt{C}) \cong \mathbb{C}/\mathbf{hl}(C)\mathbb{Z} + 2\pi i\mathbb{Z}$. There is a flow Ψ_t on $N^1(\sqrt{C})$ along the $\mathbf{hl}(C)$ direction, and all the orbits of Ψ_t are closed. Suppose $P_1, \cdots, P_k$ are the pants adjacent to C, then $D_C = d_C \cdot k$. Let $foot_C(P_j) \in N^1(\sqrt{C})$ be the foot of P_j.

Let $F' = \{foot_C(P_j) + \frac{2l\pi i}{d_C} | j = 1, \cdots, k,\ l = 1, \cdots, d_C\} \subset N^1(\sqrt{C})$, if a point appears more than one time in the definition of F', we will count it with multiplicity. Let $\Psi(F')$ be the union of closed orbits of F' under flow Ψ_t. Let $F = \Psi(F') \cap \{ti | t \in \mathbb{R}/2\pi\mathbb{Z}\} \subset N^1(\sqrt{C})$, and we will consider F as a subset of $S^1 = \mathbb{R}/2\pi\mathbb{Z}$.

Definition 5.1.3. *We say the pants $P_1, \cdots, P_k$ are p-separated along C if the distance between any two points in F is greater or equal to $\frac{2\pi}{p}$ on S^1. Note that $p \geq D_C$ always holds.*

Then we can state our main technical theorem in this chapter.

Theorem 5.1.4. *Fix a positive integer $p \geq 2$, there are universal constants $\hat{\epsilon} > 0$ and $\hat{R} > 0$ depend on p, such that for any $0 < \epsilon < \hat{\epsilon}$ and every $R > \hat{R} > 0$, the following statement holds. If X is a connected 2-complex with a pants decomposition $(X, \mathcal{C}_1, \mathcal{C}_2)$, and $\rho : \pi_1(X) \to PSL_2(\mathbb{C})$ is a viable representation such that:*

- *$S(X) \leq p$ and the induced graph $G(X)$ has $l(G(X)) > Re^{\frac{R}{4}}$,*
- *For any $C \in \mathcal{C}$, it satisfies the first modified Kahn-Markovic condition:*

$$|\mathbf{hl}(C) - \frac{R}{2}| < \frac{\epsilon}{R},$$

- *For any $C \in \mathcal{C}_1$, it satisfies the second modified Kahn-Markovic condition:*

$$|s(C) - 1| < \frac{\epsilon}{R^2},$$

- *For any $C \in \mathcal{C}_2$, $|\mathbf{l}(q(C)) - \frac{R+2k\pi i}{d_C}| < \frac{\epsilon}{d_C R}$ for some k coprime with d_C, and all the pants adjacent to C are p-separated along C.*

Then $\rho : \pi_1(X) \to PSL_2(\mathbb{C})$ is injective and $\rho(\pi_1(X))$ is a convex-cocompact subgroup of $PSL_2(\mathbb{C})$.

It is obviously that Theorem 3.2.1 is an immediate corollary of Theorem 5.1.4, so we need only to prove Theorem 5.1.4 in the following part of this chapter.

5.2 A piecewise linear map is a quasi-isometry

To prove Theorem 5.1.4, we need to give a more detailed study about Kahn-Markovic surfaces under the modified conditions. The following Theorem in [20] helps us to understand the boundary behavior of the universal cover of Kahn-Markovic surfaces in $\mathbb{H}^3$.

Theorem 5.2.1 ([20]). *There are universal constants $\hat{\epsilon}, \hat{R}, K_0 > 0$, such that the following statement holds. For any ϵ, R such that $0 < \epsilon < \hat{\epsilon}$ and $R > \hat{R}$, suppose $(S, \mathcal{C})$ is a closed surface with pants decomposition, and $f : S \looparrowright M^3$ is a viable map such that for any $C \in \mathcal{C}$,*

$$\begin{cases} |\mathbf{hl}(C) - \frac{R}{2}| < \epsilon, \\ |s(C) - 1| < \frac{\epsilon}{R} \end{cases}$$

holds. Then $\rho = f_* : \pi_1(S) \to PSL_2(\mathbb{C})$ is injective and $\rho(\pi_1(S))$ is a quasi-fuchsian group.

Moreover, suppose S is endowed with the hyperbolic metric with $\mathbf{hl}(C) = \frac{R}{2}$ and $s(C) = 1$, then $\partial\widetilde{f} : \partial\widetilde{S} = \partial\mathbb{H}^2 \to \partial\widetilde{M^3} = \partial\mathbb{H}^3$ extends to a $\pi_1(S)$-equivariant $(1 + K_0\epsilon)$-quasiconformal map $\partial\widetilde{g} : \partial\mathbb{H}^3 \to \partial\mathbb{H}^3$.

Since we can suppose f satisfies the modified Kahn-Markovic condition:

$$\begin{cases} |\mathbf{hl}(C) - \frac{R}{2}| < \frac{\epsilon}{R}, \\ |s(C) - 1| < \frac{\epsilon}{R^2}, \end{cases}$$

the induced map $\partial\widetilde{f} : \partial\widetilde{S} = \partial\mathbb{H}^2 \to \partial\widetilde{M^3} = \partial\mathbb{H}^3$ extends to a $\pi_1(S)$-equivarient $(1 + \frac{K_0\epsilon}{R})$-quasiconformal map $\partial\widetilde{g} : \partial\mathbb{H}^3 \to \partial\mathbb{H}^3$.

Let $\rho_0 : \pi_1(S) \to PSL_2(\mathbb{C})$ be the representation satisfying $\mathbf{hl}(C) = \frac{R}{2}, s(C) = 1$ near ρ, then the above map $\partial\widetilde{g} : S^2_\infty \to S^2_\infty$ is a $(1 + \frac{K_0\epsilon}{R})$-quasiconformal conjugacy between $\rho_0(\pi_1(S))$ and $\rho(\pi_1(S))$.

Such a quasiconformal conjugacy between two Kleinian groups Γ_1 and Γ_2 can be extended to a quasi-isometry from $\mathbb{H}^3/\rho_0(\pi_1(S))$ to $\mathbb{H}^3/\rho(\pi_1(S))$, and a quantitative version of this result is proved in [41] Chapter 11 and [31] Corollary B.23.

Theorem 5.2.2 ([41],[31]). *Let $M_i = \mathbb{H}^3/\Gamma_i$, $i = 1, 2$ be a pair of hyperbolic 3-manifolds, and ϕ be a K-quasiconformal conjugation between Γ_1 and Γ_2. Then ϕ*

extends to an equivariant $K^{\frac{3}{2}}$-quasi-isometry $\Phi : \mathbb{H}^3 \to \mathbb{H}^3$. In particular, M_1 and M_2 are $K^{\frac{3}{2}}$-quasi-isometric with each other.

The proof of Theorem 5.2.2 is quite differential geometry style, and the L-quasi-isometry showed up in the theorem means $(L, 0)$-quasi-isometry in the coarse geometric sense. In the following part of this chapter, we will use the language in the coarse geometry.

Given the previous a few theorems and modified Kahn-Markovic condition, we have the following quick corollary.

Corollary 5.2.3. *Fix a closed hyperbolic 3-manifold M, there exist constants $K_0, \hat{\epsilon}, \hat{R} > 0$ such that the following statement holds. Suppose S is a closed hyperbolic surface with a pants decomposition $\mathcal{C}$, and $f : S \looparrowright M$ is a viable map such that every $C \in \mathcal{C}$ satisfies the modified Kahn-Markovic condition*

$$\begin{cases} |\mathbf{hl}(C) - \frac{R}{2}| < \frac{\epsilon}{R}, \\ |s(C) - 1| < \frac{\epsilon}{R^2}, \end{cases}$$

for some $0 < \epsilon < \hat{\epsilon}$ and $R > \hat{R}$.

Let $\rho = f_* : \pi_1(S) \to PSL_2(\mathbb{C})$ be the induced map on fundamental group, and $\rho_0 : \pi_1(S) \to PSL_2(\mathbb{C})$ be the representation near ρ and satisfies $\mathbf{hl}(\mathbf{C}) = \frac{R}{2}$, $s(C) = 1$.

Let $M_1 = \mathbb{H}^3/\rho_0(\pi_1(S))$ and $M_2 = \mathbb{H}^3/\rho(\pi_1(S))$, then there exists a $\pi_1(S)$-equivariant $(1 + \frac{2K_0\epsilon}{R}, 0)$-quasi-isometry $\widetilde{g} : \mathbb{H}^3 \to \mathbb{H}^3$. In particular, there exists a $(1 + \frac{2K_0\epsilon}{R}, 0)$-quasi-isometry $g : M_1 \to M_2$.

Although we know the existence of the equivariant quasi-isometry $\widetilde{g} : \mathbb{H}^3 \to \mathbb{H}^3$, we still want to know more detail about it. We will use a more concrete partially defined map on $\widetilde{S}$ to approximate $\widetilde{g}$.

Let $(S, \mathcal{C})$ be the pants decomposition in Corollary 5.2.3. Endow S with the hyperbolic metric with $\mathbf{hl}(C) = \frac{R}{2}$ and $s(C) = 1$ for any $C \in \mathcal{C}$.

Let $\widetilde{\mathcal{C}} \subset \mathbb{H}^2$ be the preimage of $\mathcal{C}$. For each pair of pants Π in S with three cuffs $c_i,\ i = 1, 2, 3$, there are three arcs a_i in Π for $i = 1, 2, 3$, such that a_i connects c_{i-1} and c_{i+1}. We can realize the homotopy class of a_i by the common perpendicular of c_{i-1} and c_{i+1} in the hyperbolic surface S. Let $\mathcal{A}$ be the union of all these geodesic arcs in S, and $\widetilde{\mathcal{A}} \subset \mathbb{H}^2$ be the preimage of $\mathcal{A}$. Let $Y = \widetilde{\mathcal{C}} \cup \widetilde{\mathcal{A}} \subset \mathbb{H}^2 \subset \mathbb{H}^3$, then $Y \subset \mathbb{H}^3$ is a $\rho_0(\pi_1(S))$-equivariant 1-complex, and $Y \subset \mathbb{H}^2$ gives a tessellation of $\mathbb{H}^2$ by isometric hexagons.

In Corollary 5.2.3, we can suppose $\widetilde{g} : \mathbb{H}^3 \to \mathbb{H}^3$ has been extended to a self-map on $\mathbb{H}^3 \cup S^2_\infty$ and we still denote it by $\widetilde{g}$.

Let $Y' = \partial\widetilde{g}(Y)$ be the $\rho(\pi_1(S))$-equivariant 1-complex in $\mathbb{H}^3$ defined as the following. For any geodesic $\gamma \subset \widetilde{\mathcal{C}}$ with end points $x, y \in S^2_\infty$, $\partial\widetilde{g}(\gamma)$ is defined to be the geodesic with end points $\widetilde{g}(x)$ and $\widetilde{g}(y)$. For any geodesic arc $\alpha \subset \widetilde{\mathcal{A}}$ orthogonal with geodesics $\gamma_1, \gamma_2 \subset \widetilde{\mathcal{C}}$, define $\partial\widetilde{g}(\alpha)$ to be the common perpendicular of $\partial\widetilde{g}(\gamma_1)$ and $\partial\widetilde{g}(\gamma_2)$. Then define $Y' = \partial\widetilde{g}(Y) = \partial\widetilde{g}(\widetilde{\mathcal{C}}) \cup \partial\widetilde{g}(\widetilde{\mathcal{A}})$.

Then we can define a $\pi_1(S)$-equivariant homeomorphism $h : Y \to Y'$. h maps $\alpha \subset \widetilde{\mathcal{A}}$ to $\partial\widetilde{g}(\alpha)$ linearly, and maps $\gamma \subset \widetilde{\mathcal{C}}$ to $\partial\widetilde{g}(\gamma)$ piecewise linearly such that the restriction of h on each component of $\gamma \setminus \widetilde{\mathcal{A}}$ is linear.

Since the modified Kahn-Markovic condition is satisfied, it is easy to check that h is a$(1 + \frac{2\epsilon}{R}, 0)$-quasi-isometry on each geodesic segment of $Y = \widetilde{\mathcal{C}} \cup \widetilde{\mathcal{A}}$. However, we do not know whether $h : Y \to Y'$ is a global quasi-isometry yet. By using the information given by $\widetilde{g}$, we will show that h is a global quasi-isometry.

Theorem 5.2.4. *Under the induced metric from $\mathbb{H}^3$, $h : Y \to Y'$ is a $(1 + \frac{K\epsilon}{R}, K(\epsilon + \frac{1}{R})^{\frac{1}{5}})$-quasi-isometry for some universal constant $K > 0$.*

We need to show the following elementary lemma first, such kind of statement is well-known and we give a quantitative version here.

Lemma 5.2.5. *For small enough $\delta > 0$, if $\gamma : [0, n] \to \mathbb{H}^3$ is a $(1+\delta, \delta)$-quasigeodesic in $\mathbb{H}^3$, and let $\bar{\gamma}$ be the geodesic with end points $\gamma(0)$ and $\gamma(n)$, then $\gamma \subset N_\eta(\bar{\gamma})$ for $\eta = 5\delta^{\frac{1}{5}}$.*

Proof. Suppose $\gamma(t_0)$ is the farthest point on $\gamma([0, n])$ from $\bar{\gamma}$ and let $D = d(\gamma(t_0), \bar{\gamma})$. We can suppose $D > 2\delta^{\frac{1}{5}}$, or the lemma holds trivially. In this case, $t_0, n - t_0 > \frac{2\delta^{\frac{1}{5}} - \delta}{1+\delta} > \delta^{\frac{1}{5}}$.

Let $t_1 = t_0 - \delta^{\frac{1}{5}}$, $t_2 = t_0 + \delta^{\frac{1}{5}}$. Let $l_i = d(\gamma(t_0), \gamma(t_i))$ for $i = 1, 2$, and $d_i = d(\gamma(t_i), \bar{\gamma}) \leq D$. Use x_j to denote the orthogonal projection of $\gamma(t_j)$ on $\bar{\gamma}$ for $j = 0, 1, 2$.

For $x, y \in \mathbb{H}^3$, we will use $\overline{xy}$ to denote the geodesic segment from x to y.

Let ϕ_i be the angle difference between $\overline{\gamma(t_0)x_0}$ and $\overline{\gamma(t_i)x_i}$ by parallel transportation along $\bar{\gamma}$, for $i = 1, 2$. Let θ_i be the angle between $\overline{\gamma(t_i)\gamma(t_0)}$ and $\overline{\gamma(t_0)x_0}$, and let θ be the angle between $\overline{\gamma(t_1)\gamma(t_0)}$ and $\overline{\gamma(t_2)\gamma(t_0)}$. Then $\theta \leq \theta_1 + \theta_2$.

An elementary computation in hyperbolic geometry gives:

$$\cos\theta_i = \frac{\sinh D \cosh l_i - \sinh d_i \cos\phi_i}{\cosh D \sinh l_i} \geq \frac{\sinh D \cosh l_i - \sinh D}{\cosh D \sinh l_i} = \tanh D \tanh \frac{l_i}{2}. \tag{5.1}$$

Since $t_2 - t_1 = 2\delta^{\frac{1}{5}}$, and γ is a $(1+\delta, \delta)$-quasi-isometry, $d(\gamma(t_1), \gamma(t_2)) \geq \frac{2\delta^{\frac{1}{5}}}{1+\delta} - \delta$. So by hyperbolic cosine law and (5.1), we have:

$$\begin{aligned}
\cosh d(\gamma(t_1), \gamma(t_2)) &= \cosh l_1 \cosh l_2 - \sinh l_1 \sinh l_2 \cos\theta \\
&\leq \cosh l_1 \cosh l_2 - \sinh l_1 \sinh l_2 \cos(\theta_1 + \theta_2) \\
&\leq \cosh l_1 \cosh l_2 + \sinh l_1 \sinh l_2 (1 - \tanh^2 D \tanh \frac{l_1}{2} \tanh \frac{l_2}{2}).
\end{aligned} \tag{5.2}$$

Then (5.2) implies

$$\tanh^2 D \leq \frac{\cosh(l_1 + l_2) - \cosh d(\gamma(t_1), \gamma(t_2))}{\sinh l_1 \sinh l_2 \tanh \frac{l_1}{2} \tanh \frac{l_2}{2}}. \tag{5.3}$$

Since $\frac{\delta^{\frac{1}{5}}}{1+\delta} - \delta \leq l_1, l_2 \leq (1+\delta)\delta^{\frac{1}{5}} + \delta$ and $d(\gamma(t_1), \gamma(t_2)) \geq \frac{2\delta^{\frac{1}{5}}}{1+\delta} - \delta$, we have:

$$\tanh^2 D \leq \frac{\cosh\left(2(1+\delta)\delta^{\frac{1}{5}} + 2\delta\right) - \cosh\left(\frac{2\delta^{\frac{1}{5}}}{1+\delta} - \delta\right)}{\sinh^2\left(\frac{\delta^{\frac{1}{5}}}{1+\delta} - \delta\right)\tanh^2\left(\frac{\delta^{\frac{1}{5}}}{2(1+\delta)} - \frac{\delta}{2}\right)} = 24\delta^{\frac{2}{5}}(1 + O(\delta^{\frac{1}{5}})). \tag{5.4}$$

So $D \leq \sqrt{24}\delta^{\frac{1}{5}}(1 + O(\delta^{\frac{1}{5}})) < 5\delta^{\frac{1}{5}}$. □

Since $\widetilde{g} : \mathbb{H}^3 \to \mathbb{H}^3$ is a $(1 + \frac{2K_0\epsilon}{R}, 0)$-quasi-isometry, by Lemma 5.2.5, we know that $\widetilde{g}(\widetilde{\mathcal{C}}) \subset N_\eta(\partial\widetilde{g}(\widetilde{\mathcal{C}}))$ for $\eta = 5(\frac{2K_0\epsilon}{R})^{\frac{1}{5}}$. Let $p : \widetilde{g}(\widetilde{\mathcal{C}}) \to \partial\widetilde{g}(\widetilde{\mathcal{C}})$ be the nearest point projection from $\widetilde{g}(\gamma)$ to $\partial\widetilde{g}(\gamma)$ for each $\gamma \subset \widetilde{\mathcal{C}}$, then p moves every point in $\widetilde{g}(\widetilde{\mathcal{C}})$ by at most η. Let $\widetilde{g}' = p \circ \widetilde{g}|_{\widetilde{\mathcal{C}}} : \widetilde{C} \to \partial\widetilde{g}(\widetilde{\mathcal{C}})$, then $\widetilde{g}'$ is a $\pi_1(S)$-equivariant $(1 + \frac{2K_0\epsilon}{R}, 2\eta)$-quasi-isometry. In the following, we will compare $\widetilde{g}'$ and h to show that h is a quasi-isometry.

Now we are ready to prove Theorem 5.2.4.

Proof. For any oriented geodesic $\gamma \in \widetilde{\mathcal{C}}$ that corresponds with a curve $C \subset \mathcal{C}$, we will also use γ to denote the hyperbolic isometry of $\mathbb{H}^3$ that correspond with C.

For any $\alpha \in \widetilde{\mathcal{A}}$ which is orthogonal to $\gamma_1, \gamma_2 \in \widetilde{\mathcal{C}}$, we give orientations for $\alpha, \gamma_1, \gamma_2$ as in Figure 6. Let $x = \alpha \cap \gamma_2$, $y_1 = \gamma_2(x)$ and $y_2 = \gamma_1(y_1)$.

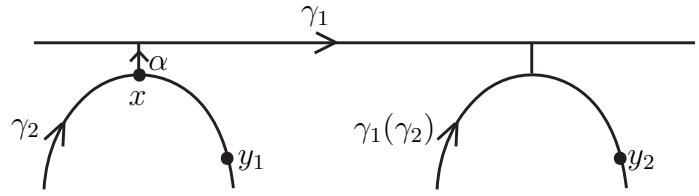

Figure 6

We will compare $\widetilde{g}'(x)$ and $h(x)$ on $\partial\widetilde{g}(\gamma_2)$, and show that they are close to each other.

Let $d_1 = d(\gamma_1, \gamma_2)$. By hyperbolic cosine law for right angled hexagons, and since all the curves $C \subset \mathcal{C}$ satisfies $\mathbf{hl}(C) = \frac{R}{2}$, we have $\cosh d_1 = \frac{\cosh\frac{R}{2}}{\cosh\frac{R}{2}-1}$. Let

$d_2 = d(y_1, \gamma_1)$. Since $d(x, y) = R$, we have $\sinh d_2 = \sinh d_1 \cosh R$, and

$$\sinh^2 d_2 = \cosh^2 R \frac{2\cosh\frac{R}{2} - 1}{(\cosh\frac{R}{2} - 1)^2}. \tag{5.5}$$

By computation in hyperbolic geometry of $\mathbb{H}^2$,

$$\begin{aligned} &\cosh d(y_1, y_2) = \cosh^2 d_2 \cosh R - \sinh^2 d_2 \\ =&\cosh R + \cosh^2 R(\cosh R - 1)\frac{2\cosh\frac{R}{2} - 1}{(\cosh^{\frac{R}{2}} - 1)^2} \\ =&\frac{1}{2}e^{\frac{5}{2}R}(1 + O(e^{-\frac{R}{2}})). \end{aligned} \tag{5.6}$$

So $d(y_1, y_2) = \frac{5}{2}R + O(e^{-\frac{R}{2}})$.

Now we think about the position of $\widetilde{g}'(x)$ on $\partial\widetilde{g}(\gamma_2)$. Let l be the oriented distance between $h(x) = h(\gamma_2) \cap h(\alpha)$ and $\widetilde{g}'(x)$ on $h(\gamma_2)$, and we will prove that l is very small.

Let $d_1' = \mathbf{d}_{h(\alpha)}(h(\gamma_2), h(\gamma_1))$, then by hyperbolic cosine law of right angled hexagons,

$$d_1' = 2e^{-\frac{R}{4} + \frac{1}{2R}(\epsilon_3 - \epsilon_2 - \epsilon_1)} + O(e^{-\frac{3R}{4}}) \tag{5.7}$$

for complex numbers ϵ_i with $|\epsilon_i| < \epsilon$ for $i = 1, 2, 3$. Let $d_2' = d(\widetilde{g}'(y_1), h(\gamma_1))$ and let the real length of $\rho(\gamma_2)$ be $R + \frac{2\epsilon_4}{R}$ for some real number ϵ_4 with $|\epsilon_4| < \epsilon$, then

$$\begin{aligned} \sinh^2 d_2' &= \cosh^2 (l + R + \frac{2\epsilon_4}{R}) \sinh^2 (\Re(d_1')) + \sinh^2 (l + R + \frac{2\epsilon_4}{R}) \sin^2 (\Im(d_1')) \\ &\geq \cosh^2 (l + R - \frac{2\epsilon}{R}) \sinh^2 ((2 + O(e^{-\frac{R}{2}}))e^{-\frac{R}{4} - \frac{3\epsilon}{2R}}) \end{aligned} \tag{5.8}$$

Here $\Re(z)$ and $\Im(z)$ are the real and imaginary part of a complex number z respectively.

Let $R_1 = \mathbf{l}(h(\gamma_1))$ be the complex translation length of $h(\gamma_1)$, then $|R_1 - R| < \frac{2\epsilon}{R}$. So by (5.7) and (5.8), we have

$$\begin{aligned}
&\cosh\left(d(\widetilde{g}'(y_1), \widetilde{g}'(y_2))\right) \\
=&\cosh^2 d_2' \cosh \Re(R_1) - \sinh^2 d_2' \cos \Im(R_1) \\
\geq&\cosh^2 d_2' \cosh\left(R - \frac{2\epsilon}{R}\right) - \sinh^2 d_2' \\
=&\cosh\left(R - \frac{2\epsilon}{R}\right) + \left(\cosh\left(R - \frac{2\epsilon}{R}\right) - 1\right)\sinh^2 d_2' \\
\geq&\cosh\left(R - \frac{2\epsilon}{R}\right) + \left(\cosh\left(R - \frac{2\epsilon}{R}\right) - 1\right)\cosh^2\left(l + R - \frac{2\epsilon}{R}\right)\sinh^2\left((2 + O(e^{-\frac{R}{2}}))e^{-\frac{R}{4} - \frac{3\epsilon}{2R}}\right) \\
=&\frac{1}{2}e^{2l + \frac{5R}{2} - \frac{9\epsilon}{R}}(1 + O(e^{-\frac{R}{2}})).
\end{aligned} \tag{5.9}$$

So $d(\widetilde{g}'(y_1), \widetilde{g}'(y_2)) \geq |2l + \frac{5R}{2} - \frac{9\epsilon}{R} + O(e^{-\frac{R}{2}})|$.

Since $\widetilde{g}'$ is a $(1 + \frac{2K_0\epsilon}{R}, 2\eta)$-quasi-isometry and $d(y_1, y_2) = \frac{5}{2}R + O(e^{-\frac{R}{2}})$, we have the following inequality:

$$(1 + \frac{2K_0\epsilon}{R})(\frac{5}{2}R + O(e^{-\frac{R}{2}})) + 2\eta \geq |2l + \frac{5R}{2} - \frac{9\epsilon}{R} + O(e^{-\frac{R}{2}})|. \tag{5.10}$$

By considering $y_1' = \gamma_2^{-1}(x)$ and $y_2' = \gamma_1^{-1}(y_1)$ and run the same argument, we have

$$(1 + \frac{2K_0\epsilon}{R})(\frac{5}{2}R + O(e^{-\frac{R}{2}})) + 2\eta \geq |-2l + \frac{5R}{2} - \frac{9\epsilon}{R} + O(e^{-\frac{R}{2}})|. \tag{5.11}$$

By (5.10) and (5.11) and $\eta = 5(\frac{2K\epsilon}{R})^{\frac{1}{5}}$, we have

$$|l| \leq \frac{5}{2}K_0\epsilon + \frac{9\epsilon}{2R} + \eta + O(e^{-\frac{R}{2}}) \leq K_1(\epsilon + \frac{1}{R} + (\frac{\epsilon}{R})^{\frac{1}{5}}). \tag{5.12}$$

Since l is the oriented distance between $\widetilde{g}'(x)$ and $h(x)$, $d(\widetilde{g}'(x), h(x)) \leq K_1(\epsilon + \frac{1}{R} + (\frac{\epsilon}{R})^{\frac{1}{5}})$ for any $x \in \widetilde{\mathcal{C}} \cap \widetilde{\mathcal{A}}$.

Since $\widetilde{g}' : \widetilde{\mathcal{C}} \to \partial\widetilde{g}(\widetilde{\mathcal{C}})$ is a $(1+\frac{2K_0\epsilon}{R}, 2\eta)$-quasi-isometry and the restriction of $h : \widetilde{\mathcal{C}} \to \partial\widetilde{g}(\widetilde{\mathcal{C}})$ on each single geodesic $C \subset \widetilde{\mathcal{C}}$ is a $(1+\frac{2\epsilon}{K}, 0)$-quasi-isometry. So $d(\widetilde{g}'(y), h(y)) \leq 2\epsilon + 2K_0\epsilon + 2\eta + K_1(\epsilon + \frac{1}{R} + (\frac{\epsilon}{R})^{\frac{1}{5}})$ for each $y \in \widetilde{\mathcal{C}}$.

So $h|_{\widetilde{\mathcal{C}}} : \widetilde{\mathcal{C}} \to \partial\widetilde{g}(\widetilde{\mathcal{C}})$ is a $\pi_1(S)$-equivariant $(1+\frac{2K_0\epsilon}{R}, K_2(\epsilon + \frac{1}{R} + (\frac{\epsilon}{R})^{\frac{1}{5}}))$-quasi-isometry. Since $\widetilde{\mathcal{C}} \subset Y$ is $2e^{-\frac{R}{4}}$ dense, $h : Y \to Y'$ is a $(1+\frac{2K_0\epsilon}{R}, K_3(\epsilon + \frac{1}{R} + (\frac{\epsilon}{R})^{\frac{1}{5}}))$-quasi-isometry. □

5.3 Estimations of angle change

Now we consider two points $x, y \in Y$ with x lying on a geodesic $\gamma \subset \widetilde{\mathcal{C}}$ and $d(x,y) \geq \frac{R}{2}$. We give γ an arbitrary orientation. Let $\alpha \subset \widetilde{\mathcal{A}}$ be one of the geodesic arcs at the same side of γ with $\overline{xy}$ on $\mathbb{H}^2$, such that it is the closest such arc from x (it is possible there are two choices of α and we choose either of them). Let $\vec{e}_1 \in T^1_x(\mathbb{H}^3)$ be the unit vector in the direction of γ, $\vec{e}_2 \in T^1_x(\mathbb{H}^3)$ be the unit vector in the direction of the parallel transportation of α to x along γ, and take the third unit vector $\vec{e}_3 \in T^1_x(\mathbb{H}^3)$ such that $(\vec{e}_1, \vec{e}_2, \vec{e}_3)$ is an orthonormal frame of $T_x(\mathbb{H}^3)$ and gives the orientation of $\mathbb{H}^3$. Let $\vec{e}$ be the unit vector in $T^1_x(\mathbb{H}^3)$ in the direction of $\overline{xy}$.

Now we define $\Theta(\gamma, \alpha, \overline{xy}) = (\theta, \phi) \in \mathbb{R}^2$ for $\theta = \Theta(\vec{e}, \vec{e}_1) \in [0, \pi]$ and $\phi = \Theta(\vec{e}, \vec{e}_3) \in [0, \pi]$. $\Theta(\gamma, \alpha, \overline{xy})$ measures the direction of $\vec{e}$ under the coordinate $(\vec{e}_1, \vec{e}_2, \vec{e}_3)$. Since $\rho_0(\pi_1(S))$ is a Fuchsian group, $\phi = \frac{\pi}{2}$. $\Theta(h(\gamma), h(\alpha), \overline{h(x)h(y)}) = (\theta'', \phi'') \in \mathbb{R}^2$ is defined similarly, with i_0 replaced by i.

The main theorem of this section is the following:

Theorem 5.3.1. *There exists constants $\hat{\epsilon} > 0$, $\hat{R} > 0$ depend only on p, such that for any $0 < \epsilon < \hat{\epsilon}$ and $R > \hat{R}$, $|\Theta(\gamma, \alpha, \overline{xy}) - \Theta(h(\gamma), h(\alpha), \overline{h(x)h(y)})| \leq \frac{1}{p}$.*

Since each hexagon in $\mathbb{H}^2 \setminus Y$ has diameter $\leq \frac{R}{2} + 1$, $\overline{xy} \cap Y = \{x_0, x_1, \cdots, x_n\}$ for $x = x_0$, $y = x_n$, and $d(x_i, x_{i+1}) \leq \frac{R}{2} + 1$. Let $h(\overline{xy})$ denote the piecewise geodesic in $\mathbb{H}^3$ which is the concatenation of $\overline{h(x_i)h(x_{i+1})}$. There is a natural piecewise linear

map $h' : \overline{xy} \to h(\overline{xy})$ such that $h'(x_i) = h(x_i)$. Since $h : Y \to Y'$ is a $(1+\mu_1, \mu_2)$-quasi-isometry for $\mu_1 = \frac{K\epsilon}{R}$, and $d(x_i, x_{i+1}) \leq \frac{R}{2} + 1$, it is easy to check that h' is a $(1+\mu_1, 3\mu_2 + 4K\epsilon)$-quasi-isometry. Since $\mu_2 = K(\epsilon + \frac{1}{R})^{\frac{1}{5}}$, h' is actually a $(1+\mu_1, 10\mu_2)$-quasi-isometry.

Let x_k be the point in $\{x_0, \cdots, x_n\}$ which is the nearest one to x such that

$$l(p) \leq d(x, x_k) \leq R \tag{5.13}$$

holds for $l(p) = \frac{1}{10000p^2}$. If $x_k \in \alpha' \subset \widetilde{\mathcal{A}}$, let x' be one of the intersection points of $\alpha' \cap \widetilde{\mathcal{C}}$. If x_k does not lie in $\widetilde{\mathcal{A}}$, simply let $x' = x_k$. By Lemma 5.2.5 and the choice of x', we have $d(h(x'), \overline{h(x)h(y)}) \leq 8(\mu_2)^{\frac{1}{5}} + 2e^{-\frac{R}{4}} \leq 10(\mu_2)^{\frac{1}{5}}$. Since $d(h(x), h(x')) \geq \frac{l(p)}{1+\mu_1} - \mu_2 - 2e^{-\frac{R}{4}} \geq \frac{l(p)}{2}$, by the hyperbolic sine law,

$$\sin\left(\angle h(x')h(x)h(y)\right) = \frac{\sinh\left(d(h(x'), \overline{h(x)h(y)})\right)}{\sinh\left(d(h(x), h(x'))\right)} \leq \frac{\sinh 10(\mu_2)^{\frac{1}{5}}}{\sinh \frac{l(p)}{2}} \leq \frac{25(\mu_2)^{\frac{1}{5}}}{l(p)}. \tag{5.14}$$

So $\angle h(x')h(x)h(y) \leq \frac{30(\mu_2)^{\frac{1}{5}}}{l(p)}$ and the same argument shows $\angle x'xy \leq \frac{30(\mu_2)^{\frac{1}{5}}}{l(p)}$. Now it suffices to show that $|\Theta(\gamma, \alpha, \overline{xx'}) - \Theta(h(\gamma), h(\alpha), \overline{h(x)h(x')})| \leq \frac{1}{2p}$. Even if x' may not be the same point as x_k, we will abuse notation and still use $x_0 = x, x_1, \cdots, x_k = x'$ to denote the intersection points of $\overline{xx'} \cap Y$.

Proposition 5.3.2. *Let θ and θ' be the first coordinate of $\Theta(\gamma, \alpha, \overline{xx'})$ and $\Theta(h(\gamma), h(\alpha), \overline{h(x)h(x')})$ respectively, then $|\theta - \theta'| \leq \frac{1}{4p}$.*

Proof. Let $d_1 = d(x, x')$, $d_2 = d(x', \gamma)$, and $d_1' = d(h(x), h(x'))$, $d_2' = d(h(x'), h(\gamma))$, then $d_2 \leq d_1$ and $d_2' \leq d_1'$. Since $h : Y \to Y'$ is a $(1+\mu_1, \mu_2)$-quasi-isometry for $\mu_1 = \frac{K\epsilon}{R}$, and $l(p) \leq d_1 \leq R$, we have $|d_1' - d_1| \leq K\epsilon + \mu_2$ and $|d_2' - d_2| \leq K\epsilon + \mu_2$. In particular, $d_1' \geq \frac{1}{2}l(p)$.

Since $\sin\theta = \frac{\sinh d_2}{\sinh d_1}$ and $\sin\theta' = \frac{\sinh d_2'}{\sinh d_1'}$, we have the following estimation:

$$\begin{aligned}
&|\sin\theta - \sin\theta'| \\
\leq &\frac{\sinh d_2 \cdot |\sinh d_1 - \sinh d_1'| + \sinh d_1 \cdot |\sinh d_2 - \sinh d_2'|}{\sinh d_1 \sinh d_1'} \\
\leq &\frac{|d_1 - d_1'| \cdot \cosh(\max(d_1, d_1')) + |d_2 - d_2'| \cdot \cosh(\max(d_2, d_2'))}{\sinh d_1'} \\
\leq &2(K\epsilon + \mu_2)\frac{\cosh(\max(d_1, d_1'))}{\sinh d_1'} \leq 2(K\epsilon + \mu_2)e^{K\epsilon+\mu_2}\coth d_1' \\
\leq &2(K\epsilon + \mu_2)e^{K\epsilon+\mu_2}\coth(\frac{1}{2}l(p)).
\end{aligned} \tag{5.15}$$

Let $\nu = 2(K\epsilon + \mu_2)e^{K\epsilon+\mu_2}\coth(\frac{1}{2}l(p))$. If both θ and θ' are acute angles, then

$$\nu \geq |\sin\theta - \sin\theta'| = 2\sin\frac{|\theta - \theta'|}{2}\cos\frac{\theta + \theta'}{2} \geq 2\sin^2\frac{|\theta - \theta'|}{2} \geq \frac{(\theta - \theta')^2}{8}. \tag{5.16}$$

So in this case $|\theta - \theta'| \leq \sqrt{8\nu}$.

Without lose of generality, we can always suppose θ is an acute angle. If θ' is also acute, the above inequality implies $|\theta - \theta'| \leq \sqrt{8\nu} \leq \frac{1}{4p}$, so the lemma is proved.

If θ' is not acute, we will show that both θ and θ' are very close to $\pi/2$. Let β be the subray of γ starting at x and has acute angle with $\overline{xx'}$. In this case, the angle between $\overline{h(x)h(x')}$ and $h(\beta)$ is an obtuse angle, so $d(h(x'), h(\beta)) = d(h(x'), h(x))$. By this geometric observation, we have:

$$d(x', \gamma) = d(x', \beta) \geq \frac{d(h(x'), h(\beta))}{1 + \mu_1} - \mu_2 = \frac{d(h(x'), h(x))}{1 + \mu_1} - \mu_2 \geq \frac{d(x', x)}{(1 + \mu_1)^2} - 2\mu_2. \tag{5.17}$$

Since $d(x', x) \leq R$ and $\mu_1 = \frac{K\epsilon}{R}$, $d(x', \gamma) \geq \frac{d(x',x)}{(1+\mu_1)^2} - 2\mu_2 \geq d(x', x) - (3K\epsilon + 2\mu_2)$. So

$$\begin{aligned}
\sin\theta = \frac{\sinh d(x', \gamma)}{\sinh d(x', x)} &\geq \frac{\sinh(d(x', x) - (3K\epsilon + 2\mu_2))}{\sinh(d(x', x))} \\
&\geq \frac{\sinh(l(p) - (3K\epsilon + 2\mu_2))}{\sinh(l(p))} \geq 1 - (3K\epsilon + 2\mu_2)\coth(l(p)).
\end{aligned} \tag{5.18}$$

So $\frac{\pi}{2} - \theta \leq 2\sqrt{(3K\epsilon + 2\mu_2)\coth l(p)} \leq \frac{1}{8p}$, and the same argument shows that $\theta' - \frac{\pi}{2} \leq \frac{1}{8p}$. These two estimations give $|\theta' - \theta| \leq \frac{1}{4p}$. □

Since the second coordinate of $\Theta(\gamma, \alpha, \overline{xx'}) = (\theta, \phi)$ satisfies $\phi = \frac{\pi}{2}$, we need only to estimate the second coordinate ϕ' of $\Theta(h(\gamma), h(\alpha), \overline{h(x)h(x')}) = (\theta', \phi')$.

Proposition 5.3.3. *For small enough $\epsilon > 0$ and large enough R, we have $|\phi' - \frac{\pi}{2}| \leq \frac{1}{4p}$.*

We first need the following local estimation:

Lemma 5.3.4. *If $\alpha \subset \partial\widetilde{g}(\widetilde{\mathcal{A}})$ is the common perpendicular of two geodesics $\gamma_1, \gamma_2 \subset \partial\widetilde{g}(\widetilde{\mathcal{C}})$ such that $z_i = \gamma_i \cap \alpha$, and y is a point on γ_1 such that $d = d(y, z_1) \leq R$. Let P_1 be the hyperbolic plane containing γ_1 and z_2, P_2 be the hyperbolic plane containing γ_2 and y, and ψ be the angle between P_1 and P_2, then $\psi \leq \frac{10\epsilon}{R}$.*

Proof. Let $\beta = \angle z_1 z_2 y$, and $b + i\xi = \mathbf{d}_\alpha(\gamma_1, \gamma_2)$. Here we choose orientations for $\alpha, \gamma_1, \gamma_2$ such that $b > 0$ and ξ is close to 0.

By the hyperbolic cosine law on right angled hexagons,

$$\mathbf{d}_\alpha(\gamma_1, \gamma_2) = b + i\xi = 2e^{-\frac{R}{4} + \frac{\epsilon_3 - \epsilon_2 - \epsilon_1}{2R}} + O(e^{-\frac{3R}{4}}) + O(e^{-\frac{3R}{4}})\frac{\epsilon}{R}i, \tag{5.19}$$

here the two $O(e^{-\frac{3R}{4}})$s are two different real functions. So $b \geq e^{-\frac{R}{4}}$, and $|\xi| \leq \frac{4\epsilon}{R}e^{-\frac{R}{4}}$.

An elementary computation gives $\cos\psi = \frac{\cos\beta\cos\xi}{\sqrt{1-\sin^2\beta\cos^2\xi}}$, so

$$\sin^2\psi = \frac{\sin^2\xi}{1 - \sin^2\beta\cos^2\xi}. \tag{5.20}$$

For the angle β, we have the following estimation:

$$\begin{aligned} \sin^2\beta = \frac{\sinh^2 d}{\sinh^2 d(y, z_2)} = \frac{\cosh^2 d - 1}{\cosh^2 d\cosh^2 b - 1} \\ \leq \frac{\cosh^2 R - 1}{\cosh^2 R\cosh^2(e^{-\frac{R}{4}}) - 1} = 1 - e^{-\frac{R}{2}} + O(e^{-R}). \end{aligned} \tag{5.21}$$

By (5.20) and (5.21)

$$\begin{aligned}\sin^2\psi \leq & \frac{\sin^2\xi}{1-(1-e^{-\frac{R}{2}}+O(e^{-R}))\cos^2\xi} \\ \leq & \frac{\sin^2(\frac{4\epsilon}{R}e^{-\frac{R}{4}})}{1-(1-e^{-\frac{R}{2}}+O(e^{-R}))\cos^2(\frac{4\epsilon}{R}e^{-\frac{R}{4}})} \leq \frac{32\epsilon^2}{R^2}.\end{aligned} \tag{5.22}$$

So $\psi \leq \frac{10\epsilon}{R}$.

□

Now we are ready to prove Proposition 5.3.3:

Proof. Let $x = x_0, x_1, \cdots, x_k = x'$ be the intersection of $\overline{xx'}$ with $Y = \widetilde{\mathcal{C}} \cup \widetilde{\mathcal{A}}$, and $y_i = h(x_i)$. Let C_i be the geodesic (segment) in $\partial\widetilde{g}(\widetilde{\mathcal{C}}) \cup \partial\widetilde{g}(\widetilde{\mathcal{A}})$ passing through y_i.

Let P_0 be the hyperbolic plane containing $C_0 = h(\gamma)$ and $h(\alpha)$, P_0' be the hyperbolic plane containing C_0 and y_1. Let P_i be the hyperbolic plane containing C_i and y_{i-1}, and P_i' be the hyperbolic plane containing C_i and y_{i+1} for $i = 1, \cdots, k-1$. When considering about ρ_0, all of these planes coincide with each other. So for each plane P_i or P_i', we can give it an orientation such that the corresponding orientations coincide with each other when considering ρ_0.

Since $d(x, x_{k-1}) \leq l(p) \leq \frac{1}{10000p^2}$, by Lemma 2.3 of [20], $k \leq (2+R)e^5 l(p) \leq 500Rl(p)$. The position of y_{i-1}, y_i and geodesics C_{i-1}, C_i looks like a) or b) in Figure 7 for $i = 1, \cdots, k-1$. By the choice of x', the position of y_{k-1}, y_k and C_{k-1}, C_k looks like a), b) or c) in Figure 7.

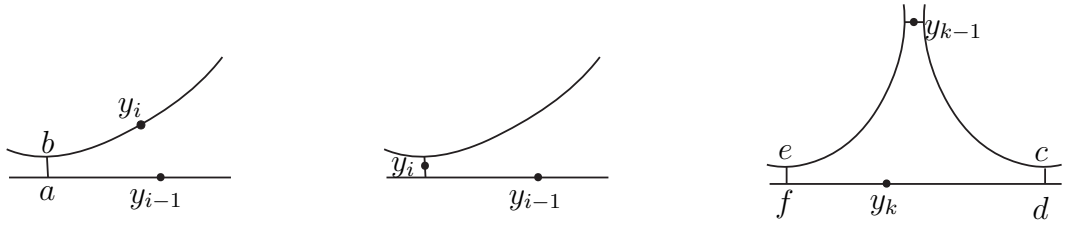

a) b) c)

Figure 7

For three points $p, q, r \in \mathbb{H}^3$ not lying on a geodesic, we will use P_{pqr} to denote the hyperbolic plane containing p, q and r. For another such hyperbolic plane $P_{p'q'r'}$ intersecting with P_{pqr}, we will use $\Theta(P_{pqr}, P_{p'q'r'}) \in [0, \frac{\pi}{2}]$ to denote the angle between these two planes.

Now we study the possible positions of y_{i-1}, y_i and C_{i-1}, C_i.

i) In case a) of Figure 7, since $d(y_{i-1}, a), d(y_i, b) < R$, Lemma 5.3.4 implies

$$\Theta(P_{ay_{i-1}y_i}, P_{aby_{i-1}}) \leq \Theta(P_{ay_{i-1}y_i}, P_{aby_i}) + \Theta(P_{aby_i}, P_{aby_{i-1}}) \leq \frac{10\epsilon}{R} + \frac{10\epsilon}{R} = \frac{20\epsilon}{R}, \quad (5.23)$$

and

$$\Theta(P'_{i-1}, P_i) = \Theta(P_{ay_{i-1}y_i}, P_{by_{i-1}y_i}) \leq \Theta(P_{ay_{i-1}y_i}, P_{aby_{i-1}}) + \Theta(P_{aby_{i-1}}, P_{by_{i-1}y_i}) \leq \frac{30\epsilon}{R}. \quad (5.24)$$

ii) In case c) of Figure 7, let β be the geodesic arc in $\partial\widetilde{g}(\widetilde{\mathcal{A}})$ containing y_{k-1} and we use β' to denote the bi-infinite geodesic containing β. Let $P_{\beta',c}$ be the hyperbolic plane containing β' and c, and $l = d(d, P_{\beta',c})$, then

$$\sinh l \leq \sin\frac{\epsilon}{R} \sinh\left(3e^{-\frac{R}{4}}\right) \leq \frac{4\epsilon}{R} e^{-\frac{R}{4}}. \quad (5.25)$$

So $l \leq \frac{4\epsilon}{R} e^{-\frac{R}{4}}$. Since $d(d, \beta') \geq \frac{R}{2} - 1$,

$$\sin\Theta(P_{\beta',c}, P_{\beta',d}) \leq \frac{\sinh\left(\frac{4\epsilon}{R} e^{-\frac{R}{4}}\right)}{\sinh\left(\frac{R}{2} - 1\right)} \leq \frac{50\epsilon}{R} e^{-\frac{3R}{4}}. \quad (5.26)$$

So $\Theta(P_{\beta',c}, P_{\beta',d}) \leq \frac{100\epsilon}{R} e^{-\frac{3R}{4}}$. The same argument shows that $\Theta(P_{\beta',e}, P_{\beta',f}) \leq \frac{100\epsilon}{R} e^{-\frac{3R}{4}}$. Since $\Theta(P_{\beta',c}, P_{\beta',e}) \leq \frac{4\epsilon}{R} e^{-\frac{R}{4}}$, and by monotonicity, we have $\Theta(P_{\beta',c}, P_{\beta',y_k}) \leq \frac{\epsilon}{R}$.

Then by a routine case-by-case argument, and using results in i) and ii), we get that:

$$\Theta(P'_{i-1}, P_i) \leq \frac{100\epsilon}{R} \tag{5.27}$$

for $i = 1, \cdots, k-1$, and

$$\Theta(P_i, P'_i) \leq \frac{100\epsilon}{R} \tag{5.28}$$

for $i = 0, \cdots, k-1$.

Now let $l_i = d(y_i, y_{i+1})$, then by (5.13), we have

$$\sum_{i=0}^{k-2} l_i \leq 2l(p) \tag{5.29}$$

and

$$\frac{l(p)}{2} \leq \sum_{i=0}^{k-1} l_i \leq R + 1. \tag{5.30}$$

Let $\vec{v}_i \in T^1_{y_i}(\mathbb{H}^3)$ be the unit normal vector of P_i at y_i and $\vec{v}'_i \in T^1_{y_i}(\mathbb{H}^3)$ be the unit normal vector of P'_i at y_i. Let z_i be the orthogonal projection of y_i on P_0 and $\vec{n}_i$ be the unit normal vector of P_0 at z_i. For $z, w \in \mathbb{H}^3$ and $\vec{v} \in T_z(\mathbb{H}^3)$, we will use $\vec{v}@w$ denote the parallel transportation of $\vec{v}$ to w along the geodesic $\overline{zw}$ as in [20].

Claim 1: For $i = 0, \cdots, k-1$, the following inequalities hold:

$$\Theta(\vec{v}_i@y_0, \vec{n}_0) \leq \frac{200i\epsilon}{R} + \sum_{j=0}^{i-1} l_j, \tag{5.31}$$

$$\Theta(\vec{v}'_i@y_0, \vec{n}_0) \leq \frac{(200i+100)\epsilon}{R} + \sum_{j=0}^{i-1} l_j. \tag{5.32}$$

We will prove Claim 1 inductively. The statement holds for $i = 0$ since $\Theta(P_0, P_0') \leq \frac{100\epsilon}{R}$. Suppose the statement holds for $i = m$, then for $i = m + 1$,

$$\begin{aligned}\Theta(\vec{v}_{m+1}@y_0, \vec{n}_0) \leq & \Theta(\vec{v}_{m+1}, \vec{v}_m'@y_{m+1}) + \Theta(\vec{v}_m'@y_{m+1}@y_0, \vec{n}_0) \\ \leq & \Theta(P_{m+1}, P_m') + \Theta(\vec{v}_m'@y_0, \vec{n}_0) + \Theta(\vec{v}_m'@y_{m+1}@y_0, \vec{v}_m'@y_0).\end{aligned} \tag{5.33}$$

By (5.27), the first term is less than $\frac{100\epsilon}{R}$, the second term is less than $\frac{(200m+100)\epsilon}{R} + \sum_{j=0}^{m-1} l_j$ by induction, and the third term is less than l_m by Proposition 4.1 of [20]. So

$$\Theta(\vec{v}_{m+1}@y_0, \vec{n}_0) \leq \frac{200(m+1)\epsilon}{R} + \sum_{j=0}^{m} l_j. \tag{5.34}$$

Since $\Theta(\vec{v}_{m+1}, \vec{v}_{m+1}') \leq \frac{100\epsilon}{R}$, the second inequality holds for $i = m + 1$ and the proof of Claim 1 is done.

Now we estimate $\Theta(\vec{v}_m'@z_m, \vec{n}_m)$ for $m = 0, \cdots, k-1$. Since $k \leq 500Rl(p)$, we have:

$$\begin{aligned}&\Theta(\vec{v}_m'@z_m, \vec{n}_m) \leq \Theta(\vec{v}_m'@z_m, \vec{v}_m'@z_0@z_m) + \Theta(\vec{v}_m'@z_0@z_m, \vec{n}_m) \\ &\leq d(y_0, y_m) + \Theta(\vec{v}_m'@y_0, \vec{n}_0) \leq 2l(p) + \frac{(200m+100)\epsilon}{R} + \sum_{j=0}^{m-1} l_j \\ &\leq 4l(p) + 2 \cdot 10^5 \epsilon l(p) \leq 10l(p).\end{aligned} \tag{5.35}$$

Claim 2: For $d_i = d(y_i, z_i) = d(y_i, P_0),\ i = 0, \cdots, k-1$:

$$d(y_i, z_i) \leq \frac{1}{100p} \sum_{j=0}^{i-1} l_j. \tag{5.36}$$

We will also prove Claim 2 by induction. The inequality holds trivially for $i = 0$. Now we suppose the inequality holds for $i = m$. For $i = m + 1$, since $\vec{v}_m' \perp \overline{y_m y_{m+1}}$

and $\Theta(\vec{v}'_m@z_m, \vec{n}_m) \leq 10l(p)$, an elementary computation gives:

$$\sinh d(y_{m+1}, z_{m+1}) = \sinh d(y_m, z_m) \cosh l_m + \cosh d(y_m, z_m) \sinh l_m \sin \theta_m \tag{5.37}$$

for some $\theta_m \leq \Theta(\vec{v}'_m@z_m, \vec{n}_m) \leq 10l(p)$ and $l_m \leq 2l(p)$.

Since $d(y_m, z_m)$, $l_m \leq 2l(p)$, we have:

$$\begin{aligned}
&\sinh d(y_{m+1}, z_{m+1}) \\
\leq &\sinh d(y_m, z_m)(1 + l_m^2) + (1 + 4l(p)^2) \cdot 2l_m \cdot 10l(p) \\
\leq &\sinh d(y_m, z_m) + 2d(y_m, z_m) l_m^2 + (1 + 4l(p)^2) \cdot 2l_m \cdot 10l(p) \\
= &\sinh d(y_m, z_m) + l_m(2d(y_m, z_m) l_m + 20l(p)(1 + 4l(p)^2) \\
\leq &\sinh d(y_m, z_m) + 100l(p) \cdot l_m.
\end{aligned} \tag{5.38}$$

So $d(y_{m+1}, z_{m+1}) \leq d(y_m, z_m) + 100l(p) \cdot l_m \leq d(y_m, z_m) + \frac{1}{100p} l_m$, and the proof of Claim 2 is done.

The final computation is to estimate $\angle z_k y_0 y_k$.

Since h is a $(1+\frac{K\epsilon}{R}, K(\epsilon+\frac{1}{R})^{\frac{1}{5}})$-quasi-isometry, and $l(p) \leq \sum_{i=0}^{k-1} l_i \leq R$, $d(y_0, y_k) \geq \max(\frac{1}{2}\sum_{i=0}^{k-1} l_i, l_{k-1} - 1)$. Moreover, $d(y_k, z_k)$ is given by the following equation:

$$\sinh d(y_k, z_k) = \sinh d(y_{k-1}, z_{k-1}) \cosh l_{k-1} + \cosh d(y_{k-1}, z_{k-1}) \sinh l_{k-1} \sin \theta_{k-1}. \tag{5.39}$$

for some $\theta_{k-1} < 10l(p)$.

If $l_{k-1} \leq 2$, (5.38) still works, so $d(y_k, z_k) \leq \frac{1}{100p} \sum_{i=0}^{k-1} l_i$. So

$$\sin \angle z_k y_0 y_k = \frac{\sinh d(y_k, z_k)}{\sinh d(y_k, y_0)} \leq \frac{\sinh \frac{\sum_{i=0}^{k-1} l_i}{100p}}{\sinh \frac{\sum_{i=0}^{k-1} l_i}{2}} \leq \frac{1}{50p}. \tag{5.40}$$

If $l_{k-1} \geq 2$, we have

$$\sinh d(y_k, z_k) \leq 4l(p)\cosh l_{k-1} + 20l(p)\sinh l_{k-1} \leq 20l(p)e^{l_{k-1}}. \tag{5.41}$$

So

$$\sin \angle z_k y_0 y_k = \frac{\sinh d(y_k, z_k)}{\sinh d(y_k, y_0)} \leq \frac{20l(p)e^{l_{k-1}}}{\sinh(l_{k-1}-1)} \leq \frac{20l(p)\cdot e^2}{\sinh 1} \leq \frac{1}{50p}. \tag{5.42}$$

In both of these cases, we have $|\psi' - \frac{\pi}{2}| = \angle z_k y_0 y_k \leq \frac{1}{4p}$. □

5.4 Proof of Theorem 5.1.4

Given Theorem 5.3.1, we are ready to prove Theorem 5.1.4:

Proof. Given the estimation in Theorem 5.3.1, the proof is similar to the proof of Lemma 3.2.2, so we will only point out the necessary modification.

In Theorem 5.1.4, if the last three conditions are replaced by $\mathbf{hl}(C) = \frac{R}{2}$, $s(C) = 1$ and $\mathbf{l}(q(C)) = \frac{R+2k\pi i}{d_C}$, the corresponding representation is exactly ρ_0. Since $l(G(X)) > Re^{\frac{R}{4}}$, the same argument as in Lemma 3.2.2 shows that Theorem 5.1.4 is true for ρ_0.

Let $q : \widetilde{X} \to X$ be the universal cover. When considering ρ_0, since $l(G(X)) > Re^{\frac{R}{4}}$, there is a natural embedding $\widetilde{X} \to \mathbb{H}^3$. The image of this embedding is a locally finite union of subsets of hyperbolic planes, and it is $\rho_0(\pi_1(X))$-equivariant. There are two metrics on $\widetilde{X}$, one is the induced metric d from $\mathbb{H}^3$, the other one is the path metric d_0 induced by d. Lemma 3.2.2 implies that these two metrics are quasi-isometric and we will always endow $\widetilde{X}$ with the metric d_0. d_0 induces a metric on X which is locally the hyperbolic metric except along a neighborhood of the singular curves.

Let $\widetilde{\mathcal{C}} \subset \widetilde{X} \subset \mathbb{H}^3$ be the preimage of the pants decomposition $\mathcal{C}$ on X, which are union of geodesics. For each pants Π in X, there are three geodesic arcs which are

the common perpendiculars of the three pair of cuffs of Π. Let $\mathcal{A} \subset X$ be the union of all such geodesic arcs and let $\widetilde{\mathcal{A}} \subset \widetilde{X}$ be the preimage of $\mathcal{A}$ in $\widetilde{X}$. Now we define $Z = \widetilde{\mathcal{C}} \cup \widetilde{\mathcal{A}}$ which is $\pi_1(X)$-equivariant.

Now we turn to study a general representation ρ, which is a deformation of ρ_0. For each geodesic $\gamma \subset \widetilde{\mathcal{C}}$, let γ' be the corresponding geodesic in $\mathbb{H}^3$ under the deformation ρ, and let $\widetilde{\mathcal{C}'}$ be the union of such γ' for all $\gamma \subset \widetilde{\mathcal{C}}$. Let $\widetilde{\mathcal{A}'}$ be the union of common perpendiculars between geodesics in $\widetilde{\mathcal{C}'}$ that correspond with geodesic arcs in $\widetilde{\mathcal{A}}$. Let $Z' = \widetilde{\mathcal{C}'} \cup \widetilde{\mathcal{A}'}$, then Z' is $\rho(\pi_1(X))$-equivariant.

There is a natural piecewise linear map $h : Z \to Z'$ defined as in Section 5.2, such that the restriction of h on each geodesic arc in $\widetilde{\mathcal{A}}$ is linear, and the restriction of h on each component of $\widetilde{\mathcal{C}} \setminus \widetilde{\mathcal{A}}$ is linear. To show the convex cocompact property of ρ, we need only to show that $h : (Z, d_0) \to (Z', d_{\mathbb{H}^3})$ is a quasi-isometry.

For any $x, y \in Z$, let α be the geodesic in $\widetilde{X}$ from x to y with $\alpha \cap q^{-1}(\mathcal{C}_2)$ at $x_1, x_2, \cdots, x_k$. Since $l(G(X)) > Re^{\frac{R}{4}}$, $d_0(x_i, x_{i+1}) \geq \frac{R}{2}$ for $i = 1, \cdots, k-1$. If $d_0(x, x_1) \geq \frac{R}{2}$, let $x_0 = x$, or let $x_0 = x_1$. Similarly, define $x_{k+1} = y$ if $d_0(x_k, y) \geq \frac{R}{2}$, or let $x_{k+1} = x_k$. Now we consider about the angles $\angle h(x_{i-1})h(x_i)h(x_{i+1})$.

Let γ_i be the geodesic in Z containing x_i, with a preferred orientation. Let θ be the angle between γ_i and $\overline{x_{i-1}x_i}$. Since α is a geodesic in $(\widetilde{X}, d_0)$, the angle between γ_i and $\overline{x_i x_{i+1}}$ equals $\pi - \theta$. Without lose of generality, we can suppose $\theta \leq \frac{\pi}{2}$.

Let θ_1 be the angle between $h(\gamma_i)$ and $\overline{h(x_{i-1})h(x_i)}$, and θ_2 be the angle between $h(\gamma_i)$ and $\overline{h(x_i)h(x_{i+1})}$. If $\theta \leq \frac{\pi}{2} - \frac{3}{2p}$, then by Theorem 5.3.1, we have $\theta_1 \leq \frac{\pi}{2} - \frac{1}{2p}$ and $\theta_2 \geq \frac{\pi}{2} + \frac{1}{2p}$, so $\angle h(x_{i-1})h(x_i)h(x_{i+1}) \geq \frac{1}{p}$.

If $\frac{\pi}{2} - \frac{3}{2p} \leq \theta \leq \frac{\pi}{2}$, then $\frac{\pi}{2} - \frac{5}{2p} \leq \theta_1 \leq \frac{\pi}{2} + \frac{1}{p}$ and $\frac{\pi}{2} - \frac{1}{p} \leq \theta_1 \leq \frac{\pi}{2} + \frac{5}{2p}$. Let P_i be the hyperbolic plane containing $h(\gamma_i)$ and $h(x_{i+1})$, and P_i' be the hyperbolic plane containing $h(\gamma_i)$ and $h(x_{i-1})$. Since the pants adjacent to singular curves are p-separated, $\Theta(P_i, P_i') \geq \frac{2\pi}{p}$.

Let $\vec{n}_i$ and $\vec{n}'_i$ be the normal vector of P_i and P'_i at $h(x_i)$ respectively, then $\Theta(\vec{n}_i, \vec{n}'_i) \geq \frac{2\pi}{p}$. Theorem 5.3.1 implies that, $|\Theta(\overline{h(x_{i-1})h(x_i)}, \vec{n}'_i) - \frac{\pi}{2}| \leq \frac{1}{p}$ and $|\Theta(\overline{h(x_i)h(x_{i+1})}, \vec{n}_i) - \frac{\pi}{2}| \leq \frac{1}{p}$. An elementary computation implies that

$$\angle h(x_{i-1})h(x_i)h(x_{i+1}) \geq \cos\frac{1}{p}\sin\frac{2\pi}{p} - \frac{2}{p} \geq (2\cos\frac{1}{2} - 1)\frac{2}{p} > 0$$

has a definite positive lower bound.

Then the following part of the proof is similar to the proof of Lemma 3.2.2. □

Remark 5.4.1. *Given the cited theorems, our proof of Theorem 5.1.4 is very elementary and quite geometric flavor, but also a little bit tedious and technical. It is possible to give alternative proofs by using geometric group theory or by using the method in [44].*

Chapter 6

The π_1-injectivity of $Z \looparrowright M$

In this chapter, we will prove two technical results in Section 4.3: Proposition 4.3.8 and Theorem 4.3.9, they were stated there without proofs. These two results are both proved by estimations in hyperbolic geometry. To prove the first result, we need only to do estimations on the standard model (union of totally geodesic subsurfaces in $\mathbb{H}^3$). To prove the second result, we need to do estimations on small deformations of the standard model, which is more complicated. These estimations are based on the estimations we have already done in Chapter 5.

Actually, Proposition 4.3.8 and Theorem 4.3.9 also hold for other nice-constructed immersed 2-complexes in closed hyperbolic 3-manifolds, by using Kahn-Markovic's and Liu-Markovic's immersed almost totally geodesic subsurfaces. However, it is difficult to give a clean formulation for the general case as in Chapter 5, so we only deal with the special case which is necessary for our application.

6.1 The modified path and estimations of the standard model

In this section, we will first introduce the concept of the *modified path*, then prove Proposition 4.3.8.

Let $Z^{(0)}$ be the union of 0-cells in Z, and let $Z^{(1)}$ be the union of 0- and 1-cells in Z. We use $\widetilde{Z}^{(0)}$ and $\widetilde{Z}^{(1)}$ to denote the preimage of $Z^{(0)}$ and $Z^{(1)}$ in $\widetilde{Z}$ respectively. The closure of a component of $\widetilde{Z} \setminus \widetilde{Z}^{(1)}$ will be called a *piece* of $\widetilde{Z}$.

For a path in $\widetilde{Z}$ which lies in a piece of $\widetilde{Z}$, if i_0 maps it to a geodesic arc in $\mathbb{H}^3$, we simply call it a geodesic arc in $\widetilde{Z}$. For two geodesic arcs in $\widetilde{Z}$ sharing a common point, we measure the angle between these two geodesic arcs by measuring the angle between their images in $\mathbb{H}^3$.

For any two points $x, y \in \widetilde{Z}$, let γ be the shortest path in $(\widetilde{Z}, d_0)$ from x to y. Then γ is a concatenation of geodesic arcs, and each geodesic arc lies in a piece of $\widetilde{Z}$. In the concatenation, γ may contain some relatively short geodesic arcs, which is not convenient for our geometric estimation. So we first introduce the concept of *modified path*, which eliminates such short geodesic arcs but does not change the length of γ much.

For the oriented shortest path γ in $(\widetilde{Z}, d_0)$ from x to y, if γ does not contain any geodesic arc in $\widetilde{Z}^{(1)}$, let $x_1, x_2, \cdots, x_n$ be the sequence of intersection points in $\widetilde{Z}^{(1)} \cap (\gamma \setminus \{x, y\})$, which follows the orientation of γ. If γ contains some geodesic arc in $\widetilde{Z}^{(1)}$, for each such geodesic arc in $\widetilde{Z}^{(1)} \cap \gamma$, we only record its initial and terminal points in $\widetilde{Z}^{(0)}$. In this case, let $x_1, x_2, \cdots, x_n$ be the sequence of transversal intersection points in $\widetilde{Z}^{(1)} \cap (\gamma \setminus \{x, y\})$ and the initial and terminal points of geodesic arcs in $\widetilde{Z}^{(1)} \cap \gamma$, such that this sequence is following the orientation of γ. The sequence $x_1, x_2, \cdots, x_n$ is called the *intersection sequence* of γ.

For the intersection sequence $x_1, x_2, \cdots, x_n$, we do the following process to define the *modified sequence*, by beginning with x_1. If $d_0(x_1, x_2) \geq \frac{R}{64}$, then we put x_1 at the first position of the modified sequence, and denote it by y_1. If $d_0(x_1, x_2) < \frac{R}{64}$, let $x_1, x_2, \cdots, x_j$ be the maximal consecutive subsequence of $x_1, x_2, \cdots, x_n$, such that $d_0(x_i, x_{i+1}) < \frac{R}{64}$ holds for $i = 1, 2, \cdots, j-1$. The 1-cells containing $x_1, x_2, \cdots, x_j$ share a common 0-cell, and denote it by y_1. We put y_1 at the first position of the modified sequence, and call it a *modified point* in this case. If the first case happens ($d_0(x_1, x_2) \geq \frac{R}{64}$), we turn to consider x_2 and whether $d_0(x_3, x_2) \geq \frac{R}{64}$; and if the second case happens ($d_0(x_1, x_2) < \frac{R}{64}$), we consider x_{j+1} and whether $d_0(x_{j+2}, x_{j+1}) \geq \frac{R}{64}$. By applying the same process inductively, we get the modified sequence $y_1, y_2, \cdots, y_m$.

Note that the maximal consecutive subsequence $x_i, \cdots, x_{i+j}$ satisfying that $d_0(x_{i+k}, x_{i+k+1}) < \frac{R}{64}$ for $k = 0, \cdots, j-1$ has length at most 3, since the angle between two 1-cells sharing a 0-cell in $\widetilde{Z}$ is $2\theta_0 \approx 0.3524\pi$, and $3 \cdot 0.3524\pi > \pi$.

By the definition of the modified sequence, two adjacent points y_i and y_{i+1} in the modified sequence lie in the same piece of $\widetilde{Z}$. Then the *modified path* γ' of γ is defined to be the concatenation of geodesic arcs connecting x to y_1, y_1 to y_2, $\cdots$, y_m to y, and each such geodesic arc lies in a piece of $\widetilde{Z}$.

Now we are ready to prove Proposition 4.3.8, and we restate the result here. In the following part of this chapter, we will use d to denote the metric $d_{\mathbb{H}^3}$ on $\mathbb{H}^3$, when it does not cause any confusion.

Proposition 6.1.1. *When R is large enough, $i_0 : (\widetilde{Z}, d_0) \to (\mathbb{H}^3, d_{\mathbb{H}^3})$ is an embedding, and also a quasi-isometric embedding. In particular, $\rho_0 : \pi_1(Z) \to PSL_2(\mathbb{C})$ is an injective map.*

Proof. For any $x, y \in \widetilde{Z}$, with $d_0(x, y) \geq \frac{R}{4}$, let γ be the shortest path in $(\widetilde{Z}, d_0)$ from x to y, with the intersection sequence $x_1, x_2, \cdots, x_n$. Let γ' be the modified path of γ, and let $y_1, y_2, \cdots, y_m$ be the modified sequence.

For any two adjacent points y_i and y_{i+1} in the modified sequence, if the geodesic arc in $\widetilde{Z}$ from y_i to y_{i+1} intersects with the preimage of some S_i, then $d_0(y_i, y_{i+1}) \geq \frac{R}{2}$, by step IV in the construction of Z (Section 4.3).

Now we suppose the geodesic arc from y_i to y_{i+1} does not intersect with the preimage of any S_i. If both y_i and y_{i+1} are modified points, then they are two distinct 0-cells in $\widetilde{Z}$, so $d_0(y_i, y_{i+1}) \geq R$. If both of them are not modified points, we have $d_0(y_i, y_{i+1}) \geq \frac{R}{64}$, by definition. If one of them is a modified point, and the other one is not, then $d_0(y_i, y_{i+1}) \geq \frac{R}{128}$ holds, by hyperbolic geometry on $\mathbb{H}^2$ and $2\theta_0 \approx 0.3524\pi$. So $d_0(y_i, y_{i+1}) \geq \frac{R}{128}$ always holds.

We claim that $\angle y_{i-1}y_iy_{i+1}$ in $\mathbb{H}^3$ has some positive lower bound, more precisely $\angle y_{i-1}y_iy_{i+1} \geq \frac{\pi}{18}$ in $\mathbb{H}^3$. Here "$\angle y_{i-1}y_iy_{i+1}$ in $\mathbb{H}^3$" actually means $\angle i_0(y_{i-1})i_0(y_i)i_0(y_{i+1})$, but we use this notation to simplify the expression.

Proof of the claim:

Case I. y_i is not a modified point, so $y_i = x_j$. Since $\angle x_{j-1}x_jx_{j+1} \geq \frac{2\pi}{5}$ in $\mathbb{H}^3$, we need only to show that $\angle x_{j+1}y_iy_{i+1}$ and $\angle x_{j-1}y_iy_{i-1}$ are both very small. Here we only show that $\angle x_{j+1}y_iy_{i+1}$ is very small, and the proof for $\angle x_{j-1}y_iy_{i-1}$ is exactly the same.

If y_{i+1} is not a modified point, then $x_{j+1} = y_{i+1}$, so $\angle x_{j+1}y_iy_{i+1} = 0$.

So we suppose y_{i+1} is a modified point, and y_{i+1} corresponds with x_{j+1}. If the geodesic arc from y_i to y_{i+1} intersects with the preimage of some S_i, then $d_0(y_i, y_{i+1}) \geq \frac{R}{2}$. By hyperbolic geometry, we know that $d_0(x_{j+1}, y_{i+1}) \leq \frac{R}{64} + 1$. So $\angle x_{j+1}y_iy_{i+1} \leq e^{-\frac{R}{4}} \leq 8e^{-\frac{R}{64}}$ in $\mathbb{H}^3$.

If the geodesic arc from y_i to y_{i+1} does not intersect with the preimage of any S_i, then the flattened picture (put two adjacent pieces of $\widetilde{Z}$ in the same hyperbolic plane) is shown in Figure 8 a). We only draw an Euclidean picture to show the position of these points and geodesics, although the real picture lies in $\mathbb{H}^2$. The following computation in the proof of Case I refers to pictures in $\mathbb{H}^2$.

By Construction 4.3.7, we have $\angle y_i y_{i+1} x_{j+1} \leq \angle x_{j+1} y_{i+1} x_{j+2} = 2\theta_0$. Since y_i is not a modified point and y_{i+1} is, $d(y_i, x_{j+1}) \geq \frac{R}{64}$ and $d(x_{j+1}, x_{j+2}) \leq \frac{R}{64}$. Then by the hyperbolic geometry in $\mathbb{H}^2$, we have

$$\frac{\sinh d(x_{j+1}, x_{j+2})}{\sin 2\theta_0} \geq \sinh d(y_{i+1}, x_{j+2}) \tag{6.1}$$

and

$$\frac{\sinh d(y_i, x_{j+2})}{\sin \angle y_i y_{i+1} x_{j+2}} = \frac{\sinh d(y_{i+1}, x_{j+2})}{\sin \angle x_{j+1} y_i y_{i+1}}. \tag{6.2}$$

Here $2\theta_0 \leq \angle y_i y_{i+1} x_{j+2} \leq 4\theta_0$.

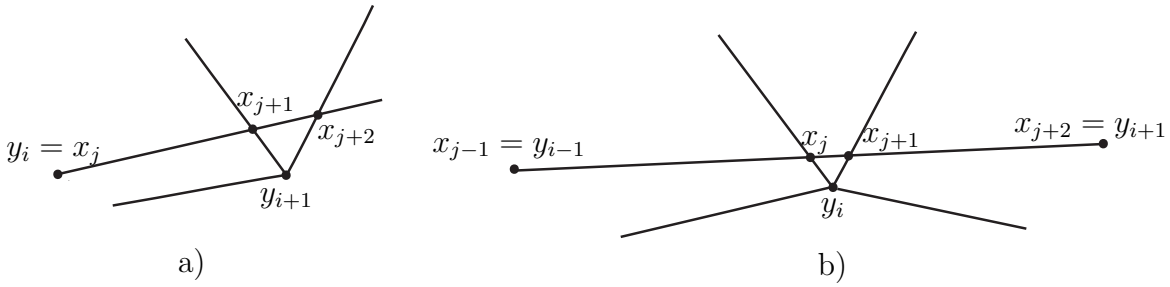

Figure 8

So

$$\begin{aligned}
&\sin \angle x_{j+1} y_i y_{i+1} = \frac{\sinh d(y_{i+1}, x_{j+2}) \cdot \sin \angle y_i y_{i+1} x_{j+2}}{\sinh d(y_i, x_{j+2})} \\
\leq &\frac{\sinh d(y_{i+1}, x_{j+2})}{2 \sinh d(y_i, x_{j+1}) \cdot \sinh d(x_{j+1}, x_{j+2})} \leq \frac{\sinh d(x_{j+1}, x_{j+2})}{2 \sinh d(y_i, x_{j+1}) \cdot \sinh d(x_{j+1}, x_{j+2}) \cdot \sin 2\theta_0} \\
= &\frac{1}{\sinh d(y_i, x_{j+1}) \cdot 2 \sin 2\theta_0} \leq 4e^{-\frac{R}{64}}.
\end{aligned} \tag{6.3}$$

In this case $\angle x_{j+1} y_i y_{i+1} \leq 8e^{-\frac{R}{64}}$ in $\mathbb{H}^3$ also holds, and the same estimation holds for $\angle x_{j-1} y_i y_{i-1}$.

Since the angle between two adjacent pieces of $\widetilde{Z}$ in $\mathbb{H}^3$ is at least $\frac{2\pi}{5}$, and γ is the shortest path in $(\widetilde{Z}, d_0)$, $\angle x_{j-1} x_j x_{j+1} \geq \frac{2\pi}{5}$ holds in $\mathbb{H}^3$. So by the above estimation, when y_i is not a modified point, $\angle y_{i-1} y_i y_{i+1} \geq \frac{\pi}{5}$ in $\mathbb{H}^3$.

Case II. y_i is a modified point, then y_i corresponds with a consecutive subsequence x_j, x_{j+1} or x_j, x_{j+1}, x_{j+2} of $x_1, x_2, \cdots, x_n$.

We first suppose that both y_{i-1} and y_{i+1} are not modified points, then the flattened picture for the first subcase (y_i corresponds with x_j, x_{j+1}) is shown in Figure 8 b). So in this flattened picture, $\angle x_{j-1}y_ix_{j+2} \leq \pi$. Since a path starting at some point in $\widetilde{Z}$ need to go through at least two other pieces of $\widetilde{Z}$ to return to the original piece and $2\theta_0 \approx 0.3524\pi$, the geometry gives us $\angle y_{i-1}y_iy_{i+1} = \angle x_{j-1}y_ix_{j+2} \geq 3 \times 0.3524\pi - \pi = 0.0572\pi > \frac{\pi}{18}$ in $\mathbb{H}^3$. The proof for the second subcase (y_i corresponds with x_j, x_{j+1}, x_{j+2}) is exactly the same.

If y_{i-1} is a modified point, then $d_0(y_{i-1}, x_{j-1}) \leq \frac{R}{64} + 1$. Moreover, since y_{i-1} and y_i are two different points in $\widetilde{Z}^{(0)}$, $d_0(y_{i-1}, y_i) \geq R$ holds, so $\angle x_{j-1}y_iy_{i-1} \leq e^{-\frac{R}{2}}$. The same argument shows that $\angle x_{j+2}y_iy_{i+1} \leq e^{-\frac{R}{2}}$ holds when y_{i+1} is a modified point. So in this case $\angle y_{i-1}y_iy_{i+1} \geq 0.0572\pi - 2e^{-\frac{R}{2}} > \frac{\pi}{18}$ in $\mathbb{H}^3$, and the proof of the claim is done.

So we know that $d_0(y_i, y_{i+1}) \geq \frac{R}{128}$ and $\angle y_{i-1}y_iy_{i+1} \geq \frac{\pi}{18}$ in $\mathbb{H}^3$. Actually, the same argument implies $\angle xy_1y_2 \geq \frac{\pi}{18}$ in $\mathbb{H}^3$ when $d_0(x, x_1) \geq \frac{R}{32}$, and so does $\angle y_{m-1}y_my$.

Since d_0 is the path metric induced by the hyperbolic metric $d_{\mathbb{H}^3}$,

$$d_{\mathbb{H}^3}(i_0(x), i_0(y)) \leq d_0(x, y). \tag{6.4}$$

On the other hand, since γ' is a path from x to y,

$$d_0(x, y) \leq d_0(x, y_1) + d_0(y_m, y) + \sum_{j=1}^{m-1} d_0(y_j, y_{j+1}). \tag{6.5}$$

Lemma 4.8 (1) of [25] implies that, when $d_0(x, x_1), d_0(y, x_n) \geq \frac{R}{32}$,

$$d_{\mathbb{H}^3}(i_0(x), i_0(y)) \geq d_0(x, y_1) + d_0(y_m, y) + \sum_{j=1}^{m-1} d_0(y_j, y_{j+1}) - m(2\log(\sec\frac{17\pi}{36}) + 1)$$
$$\geq \frac{9}{10}(d_0(x, y_1) + d_0(y_m, y) + \sum_{j=1}^{m-1} d_0(y_j, y_{j+1})) \geq \frac{9}{10} d_0(x, y). \tag{6.6}$$

If $d_0(x, x_1)$ or $d_0(y, x_n)$ is less than $\frac{R}{32}$, the same argument gives

$$d_{\mathbb{H}^3}(i_0(x), i_0(y)) \geq \frac{9}{10} d_0(x, y) - \frac{R}{8}. \tag{6.7}$$

Now we have that $i_0 : (\widetilde{Z}, d_0) \to (\mathbb{H}^3, d_{\mathbb{H}^3})$ is a quasi-isometric embedding, so $\rho_0 : \pi_1(Z) \to PSL_2(\mathbb{C})$ is an injective map. Actually, the above argument shows that $d(i_0(x), i_0(y)) \geq \frac{R}{10}$ if $d_0(x, y) \geq \frac{R}{4}$. Moreover, $i_0(x) \neq i_0(y)$ holds if $0 < d_0(x, y) < \frac{R}{4}$, by the local geometry of $i_0(\widetilde{Z})$. So we have that $i_0 : \widetilde{Z} \to \mathbb{H}^3$ is an embedding. □

6.2 Estimations of the deformations of i_0

Now we turn to prove Theorem 4.3.9. Actually, $j_* : \pi_1(Z) \to \pi_1(M) \subset PSL_2(\mathbb{C})$ lies in a continuous family of small deformations of $\rho_0 : \pi_1(Z) \to PSL_2(\mathbb{C})$, and we will show that all the representations in this family satisfy Theorem 4.3.9. Each such representation $\rho : \pi_1(Z) \to PSL_2(\mathbb{C})$ is accompanied with a $\pi_1(Z)$-equivariant partially defined map $i : \widetilde{Z} \to \mathbb{H}^3$, which serves as the geometric realization of ρ. We will do geometric estimations for $i : \widetilde{Z} \to \mathbb{H}^3$ to deduce desired properties of ρ.

We first define an 1-dimensional subcomplex $W \subset Z$. The 0-cells, 1-cells of Z, and all the circles in the pants decomposition of S_i $(i = 1, 2, \cdots, k)$ are contained in W. Besides these parts, for each pair of pants in S_i, the three seams of this pants are contained in W; for each cornered annulus in Z, a few (one, two or four, depends on

the number of corners of this cornered annulus) disjoint arcs from the corners to the circle boundary component are also contained in W. Moreover, the position of the end points of these arcs on the circles are given by the following assignment. When considering $i_0 : \widetilde{Z} \to \mathbb{H}^3$ we defined in Construction 4.3.7, each component of the preimage of these arcs is mapped to a geodesic arc which is perpendicular with the corresponding bi-infinite geodesic it intersects with.

By the definition of W, each component of $Z \setminus W$ is a topological disc. Let $\widetilde{W}$ be the preimage of W in $\widetilde{Z}$. Then for the embedding $i_0|_{\widetilde{W}} : \widetilde{W} \to \mathbb{H}^3$, all pair of geodesic (arcs) in $i_0(\widetilde{W})$ that intersect with each other are perpendicular with each other, except the case that the intersection point lies in $i_0(\widetilde{Z}^{(0)})$.

Now let us define a map $i : \widetilde{W} \to \mathbb{H}^3$, which gives a representation $\rho : \pi_1(Z) \to PSL_2(\mathbb{C})$. Before the construction of i, we first need to choose some parameters. Recall that, for each S_i, $j(\partial S_i)$ is a multicurve in $\mathbb{Z}\mathbf{\Gamma}_{r_iR,\frac{\epsilon}{r_iR}}$ for $r_i \in \{1, 2, 4\}$.

Parameter 6.2.1.

- *For each 1-cell t in Z, it is associate with the following parameters.*
  - *A real number δ_t, such that $|\delta_t| < \frac{\epsilon}{R}$.*
  - *Two unit vectors $\vec{u}_{1,t}, \vec{u}_{2,t} \in S^2$, such that the angles between $\vec{u}_{1,t}, \vec{u}_{2,t}$ and the corresponding vectors $\vec{v}_1, \vec{v}_2$ in Table 1 are less than $\frac{\epsilon}{R}$ respectively.*
  - *An element $S_t \in SO(3)$, such that $\Theta(\vec{v}, S_t\vec{v}) < \frac{\epsilon}{R}$ for any $\vec{v} \in S^2$.*
- *For each circle C in the pants decomposition of S_i which does not lie on the boundary of S_i, it is associated with two complex numbers ξ_C and η_C, such that $|\xi_C| < \frac{\epsilon}{r_iR}$ and $|\eta_C| < \frac{\epsilon}{(r_iR)^2}$.*
- *For each boundary component C of S_i, it is associated with a complex number η_C such that $|\eta_C| < \frac{\epsilon}{(r_iR)^2}$.*

Then the map $i : \widetilde{W} \to \mathbb{H}^3$ is defined by the following conditions, which is similar with Construction 4.3.7. Note that the parameters are given for 1-cells and circles in

Z, but not in $\widetilde{Z}$. So $i : \widetilde{W} \to \mathbb{H}^3$ is $\pi_1(Z)$-equivariant for some $\rho : \pi_1(Z) \to PSL_2(\mathbb{C})$, and the following conditions also define this $\rho : \pi_1(Z) \to PSL_2(\mathbb{C})$.

Construction 6.2.2.

- *Suppose each bi-infinite line in $\widetilde{W}$ is subdivided to concatenation of compact arcs by its intersection with other arcs in $\widetilde{W}$, then all the arcs in $\widetilde{W}$ are mapped to geodesic arcs in $\mathbb{H}^3$ (under the arc length parametrization induced by $(\widetilde{Z}, d_0)$).*

- *For each 0-cell $x \in \widetilde{W}$ which is also a 0-cell in $\widetilde{Z}$, it is associated with an orthonormal frame $(\vec{e}_1, \vec{e}_2, \vec{e}_3)$ at $i(x)$ with respect to the orientation of $\mathbb{H}^3$.*

- *For each 1-cell $t' \in \widetilde{W}$ which is also a 1-cell in $\widetilde{Z}$, it is endowed with an orientation such that the oriented 1-cell $t = p(t')$ in Z corresponds with one of the oriented 1-cell a, b, c, d, e, f in X'. Suppose t' travels from one 0-cell x to another 0-cell y in $\widetilde{Z}$, let $(\vec{e}_1, \vec{e}_2, \vec{e}_3)$ and $(\vec{e}'_1, \vec{e}'_2, \vec{e}'_3)$ be the two orthonormal frames at $i(x)$ and $i(y)$ respectively, then the following conditions hold.*

  - *$i(t')$ is a geodesic arc from $i(x)$ to $i(y)$ with length equals $L + \delta_t$.*
  - *The tangent vectors of $i(t')$ at $i(x)$ and $i(y)$ are equal to $\vec{u}_{1,t}$ and $\vec{u}_{2,t}$ respectively (under the coordinate given by frames $(\vec{e}_1, \vec{e}_2, \vec{e}_3)$ and $(\vec{e}'_1, \vec{e}'_2, \vec{e}'_3)$).*
  - *The parallel transportation of $(\vec{e}_1, \vec{e}_2, \vec{e}_3)$ to $i(y)$ along $i(t')$ is equal to the composition of S_t and the counterclockwise $\pi - 2\theta_0$ rotation of $(\vec{e}'_1, \vec{e}'_2, \vec{e}'_3)$ about the vector $\vec{n} \in T^1_{i(y)}(M)$ in (4.2).*

- *For any circle C in the pants decomposition of some S_i, the image of each component of $p^{-1}(C)$ under i is a bi-infinite geodesic in $\mathbb{H}^3$. For any circle C which lies in ∂S_i, the image of each component of $p^{-1}(C)$ under i share the same limit points with the corresponding concatenation of geodesic arcs on $\partial\mathbb{H}^3 = S^2_\infty$.*

- *For any arc in $\widetilde{W}$ which corresponds with a seam in a pair of pants, or goes from a corner point to the opposite circle in a cornered annulus of Z, it is mapped to a geodesic arc which is perpendicular with the corresponding bi-infinite geodesic.*

- *For any oriented circle C in S_i shared by two pair of pants Π_1 and Π_2 in the oriented surface S_i,*

$$\begin{cases} \mathbf{hl}_{\Pi_1}(C) = \mathbf{hl}_{\Pi_2}(C) = \frac{r_i R}{2} + \xi_C, \\ s(C) = 1 + \eta_C, \end{cases}$$

  holds. For the geometric meaning of $\mathbf{hl}_{\Pi}(C)$ and $s(C)$ in this context, see Construction 4.3.7.

- *For any oriented boundary component C_i of S_i which is the cuff of a pair of pants $\Pi \subset S_i$, in step III of the construction of $j : Z \to M$, we have chosen an arc $\alpha_i \subset W$ which goes from some 0-cell of a cornered annulus in Z to C_i. Take an arbitrary bi-infinite line $\beta \subset \widetilde{W}$ which is a component of $p^{-1}(C_i)$, and any arc α in $\widetilde{W}$ that intersects with β and projects to α_i. Let α' be the arc that intersects with β and projects to a seam of Π, such that $i_0(\alpha')$ is the nearest such arc from $i_0(\alpha)$. Then the tangent vector of $i(\alpha)$ is the $1 + \pi i + \eta_{C_i}$ translation of the tangent vector of $i(\alpha')$ along $i(\beta)$. Actually, $|\mathbf{hl}_{\Pi}(C_i) - \frac{r_i R}{2}| < \frac{\epsilon}{R}$ holds here, and the exact value of $\mathbf{hl}_{\Pi}(C_i)$ is determined by the geometry of $i|_{\widetilde{Z}^{(1)}}$.*

Note that when $\delta_t = 0$, $\vec{u}_{1,t}$, $\vec{u}_{2,t}$ are equal to the corresponding vectors $\vec{v}_1$, $\vec{v}_2$ respectively, and $S_t = id_{SO(3)}$ for any 1-cell t; while $\xi_C = 0$ and $\eta_C = 0$ for any circle C, the map $i : \widetilde{W} \to \mathbb{H}^3$ is exactly the restriction of our standard model $i_0 : \widetilde{Z} \to \mathbb{H}^3$ to $\widetilde{W}$ (Construction 4.3.7). By the construction of $j : Z \to M$ in Section 4.3, we can choose proper parameters in Parameter 6.2.1 such that $i : \widetilde{W} \to \mathbb{H}^3$ equals $\widetilde{j}|_{\widetilde{W}} : \widetilde{W} \to \widetilde{M} = \mathbb{H}^3$.

Under small parameters in Parameter 6.2.1, $i : (\widetilde{W}, d_0) \to (\mathbb{H}^3, d_{\mathbb{H}^3})$ has the following nice property.

Theorem 6.2.3. *There exists constants $\hat{\epsilon} > 0$ and $\hat{R} > 0$, such that for any positive numbers $\epsilon < \hat{\epsilon}$ and $R > \hat{R}$, the following statement holds. For any parameters in Parameter 6.2.1 with ϵ and R as above, the map $i : (\widetilde{W}, d_0|_{\widetilde{W}}) \to (\mathbb{H}^3, d_{\mathbb{H}^3})$ given by Construction 6.2.2 is a quasi-isometric embedding.*

Theorem 6.2.3 implies Theorem 4.3.9 by the following argument.

Proof. $i : (\widetilde{W}, d_0|_{\widetilde{W}}) \to (\mathbb{H}^3, d_{\mathbb{H}^3})$ is a quasi-isometric embedding clearly implies $j_* : \pi_1(Z) \to \pi_1(M) \subset PSL_2(\mathbb{C})$ is an injective map, when the parameters are properly chosen. We can choose a continuous family of parameters satisfying the conditions in Parameter 6.2.1, such that the associated family of maps $i_s : \widetilde{W} \to \mathbb{H}^3$ ($s \in [0,1]$) connects $i_0|_{\widetilde{W}} : \widetilde{W} \to \mathbb{H}^3$ to $\widetilde{j}|_{\widetilde{W}} : \widetilde{W} \to \mathbb{H}^3$. So there exists a continuous family of representations $\rho_s : \pi_1(Z) \to PSL_2(\mathbb{C})$ such that ρ_s lies in $int(AH(\pi_1(Z)))$ for any $s \in [0,1]$, with ρ_0 given by the standard model $i_0 : \widetilde{Z} \to \mathbb{H}^3$ and $\rho_1 = j_*$. Here

$$AH(\pi_1(Z)) = \{\rho : \pi_1(Z) \to PSL_2(\mathbb{C}) |\ \rho \textit{ is a discrete, } faithful \textit{ representation}\}/\sim .$$

So $\mathbb{H}^3/j_*(\pi_1(Z))$ is homeomorphic with $\mathbb{H}^3/\rho_0(\pi_1(Z))$ with respect to the induced orientations from $\mathbb{H}^3$, which completes the proof of Theorem 4.3.9. □

So it remains to prove Theorem 6.2.3.

In Theorem 5.2.4 and Theorem 5.3.1, we have given estimations for the quasi-isometry constant and angle change on each component of $\widetilde{W} \cap p^{-1}(S_i)$. We first remind the readers about the setting of these two estimations.

Let V be a component of $\widetilde{W} \cap p^{-1}(S_i)$. Take two points $x, y \in V$, such that $d_0(x,y) \geq \frac{R}{4}$, and x lies on some component of $p^{-1}(\partial S_i) \cap V$, which is denoted by β. We will give coordinates for the tangent vectors of $\overline{i_0(x)i_0(y)}$ and $\overline{i(x)i(y)}$ at $i_0(x)$ and

$i(x)$ respectively, under some properly chosen frames. More precisely, endow β with an arbitrary orientation, let $\alpha \subset V$ be the arc that intersects with β and projects to a seam in S_i, such that α is the closest such arc from x. Let $\vec{e}_1 \in T^1_{i_0(x)}(\mathbb{H}^3)$ be the tangent vector of $i_0(\beta)$ at $i_0(x)$, $\vec{e}_2 \in T^1_{i_0(x)}(\mathbb{H}^3)$ be the parallel transportation of the tangent vector of $i_0(\alpha)$ to $i_0(x)$ along $i_0(\beta)$, and $\vec{e}_3 \in T^1_{i_0(x)}(\mathbb{H}^3)$ such that the orthonormal frame $(\vec{e}_1, \vec{e}_2, \vec{e}_3)$ gives the orientation of $\mathbb{H}^3$. Let θ be the angle between $\vec{e}_1$ and the tangent vector of $\overline{i_0(x)i_0(y)}$ at $i_0(x)$, and let ϕ be the angle between $\vec{e}_3$ and the tangent vector of $\overline{i_0(x)i_0(y)}$ at $i_0(x)$. Then we define $\Theta(i_0(\beta), i_0(\alpha), \overline{i_0(x)i_0(y)}) = (\theta, \phi)$. We also define θ', ϕ' and $\Theta(i(\beta), i(\alpha), \overline{i(x)i(y)}) = (\theta', \phi')$ by the same way, with i_0 replaced by i. Note that $\phi = \frac{\pi}{2}$ since $i_0(V)$ lies in a totally geodesic plane in $\mathbb{H}^3$.

Theorem 5.2.4 and Theorem 5.3.1 give the following statement.

Theorem 6.2.4. *For any $0 < \delta < 1$, there exists constants $\hat{\epsilon} > 0$ and $\hat{R} > 0$, such that for any positive numbers $0 < \epsilon < \hat{\epsilon}$ and $R > \hat{R}$, the following estimations hold.*

1. *$i|_V : (V, d_0|_V) \to (\mathbb{H}^3, d_{\mathbb{H}^3})$ is an $(1 + k\frac{\epsilon}{R}, k(\epsilon + \frac{1}{R})^{\frac{1}{5}})$-quasi-isometric embedding for some universal constant $k > 0$.*

2. *$|\Theta(i_0(\beta), i_0(\alpha), \overline{i_0(x)i_0(y)}) - \Theta(i(\beta), i(\alpha), \overline{i(x)i(y)})| = |(\theta - \theta', \phi - \phi')| < (\frac{\delta}{300})^2$.*

The estimation we need should give quasi-isometric constants and angle change estimations on pieces of $\widetilde{Z}$. Each piece of $\widetilde{Z}$ is the union of some component of $p^{-1}(S_i)$ and components of the preimage of cornered annuli. To extend the estimations in Theorem 6.2.4 to pieces of $\widetilde{Z}$, we first need to give some estimations on the preimage of cornered annuli.

The following estimations are intuitive and elementary, so we leave it as an exercise for the readers.

Lemma 6.2.5. *Let x_1, x_2, y_1, y_2 be four points in $\mathbb{H}^2$, and let Q be the union of the four geodesic arcs $\overline{x_1x_2}, \overline{y_1y_2}, \overline{x_1y_1}, \overline{x_2y_2}$ as in Figure 9 a). The geometry of these four points*

satisfies: $\overline{y_1y_2}$ *is perpendicular with both* $\overline{x_1y_1}$ *and* $\overline{x_2y_2}$, $\angle y_1x_1x_2 = \angle y_2x_2x_1 = \theta_0$ *and* $d(x_1, x_2) = L$.

Let x_1', x_2', y_1', y_2' *be another set of four points in* $\mathbb{H}^3$, *and let* Q' *be the union of the four geodesic arcs* $\overline{x_1'x_2'}, \overline{y_1'y_2'}, \overline{x_1'y_1'}, \overline{x_2'y_2'}$ *as in Figure 9 b). The geometry of these four points satisfies:* $\overline{y_1'y_2'}$ *is perpendicular with both* $\overline{x_1'y_1'}$ *and* $\overline{x_2'y_2'}$, $|d(x_1, y_1) - d(x_1', y_1')|, |d(x_2, y_2) - d(x_2', y_2')| < \frac{10\epsilon}{R}$ *and* $|d(x_1', x_2') - L| < \frac{10\epsilon}{R}$. *Moreover, the angle between the tangent vector of* $\overline{y_1'x_1'}$ *(at* y_1'*) and the parallel transportation of the tangent vector of* $\overline{y_2'x_2'}$ *(at* y_2'*) to* y_1' *along* $\overline{y_2'y_1'}$ *is less than* $\frac{10\epsilon}{R}$.

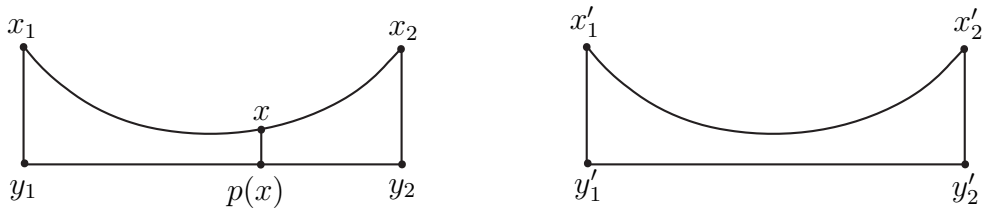

a) *b)*

Figure 9

Let $p : \overline{x_1x_2} \to \overline{y_1y_2}$ *and* $p' : \overline{x_1'x_2'} \to \overline{y_1'y_2'}$ *be the nearest point projection, and* $r : Q \to Q'$ *be the piecewise linear homeomorphism sending* x_1, x_2, y_1, y_2 *to* x_1', x_2', y_1', y_2' *respectively.*

Then for any $x \in \overline{x_1x_2}$, *the following estimations hold.*

- $|d(p(x), x) - d(p'(r(x)), r(x))| < 80\sqrt{\frac{\epsilon}{R}}$.
- $d(r(p(x)), p'(r(x))) < 80\sqrt{\frac{\epsilon}{R}}$.
- $|\angle x_1xp(x) - \angle x_1'r(x)p'(r(x))| < 80\sqrt{\frac{\epsilon}{R}}$.

In $\widetilde{Z}$, each component of the preimage of a cornered annulus is subdivided into union of 4-gons by $\widetilde{W}$. Let R be the intersection of such a 4-gon with $\widetilde{W}$, then $i_0(R) \subset \mathbb{H}^2 \subset \mathbb{H}^3$ has exactly the same geometry as Q in Lemma 6.2.5.

To apply Lemma 6.2.5 to compare the geometry between $i_0(R)$ and $i(R)$, we need the following lemma, which shows that $i(R) \subset \mathbb{H}^3$ satisfies the conditions of

Q' in Lemma 6.2.5, and also gives some further estimations. The proof follows from Construction 6.2.2 and elementary hyperbolic geometry.

Lemma 6.2.6. *Let x_1, x_2, y_1, y_2 be the four vertices of $R \subset \widetilde{W}$, such that the position of these four point are as shown in Figure 9 a), then the following estimation holds.*

- $|d(i(x_1), i(x_2)) - L| < \frac{\epsilon}{R}$.
- $|d(i(x_1), i(y_1)) - \cosh^{-1}(\csc\theta_0)|, |d(i(x_2), i(y_2)) - \cosh^{-1}(\csc\theta_0)| < \frac{9\epsilon}{R}$.
- *The angle between the tangent vector of $\overline{i(y_1)i(x_1)}$ (at $i(y_1)$) and the parallel transportation of the tangent vector of $\overline{i(y_2)i(x_2)}$ (at $i(y_2)$) to $i(y_1)$ along $\overline{i(y_2)i(y_1)}$ is smaller than $\frac{10\epsilon}{R}$.*
- $|d(i(y_1), i(y_2)) - R| < \frac{30\epsilon}{R}$.
- *For any $x \in \overline{i(x_1)i(x_2)}$, let x' be the nearest point projection of $i(x)$ on $\overline{i(y_1)i(y_2)}$, then $\Theta(P_{i(x_1)i(x_2)x'}, P_{i(y_1)i(y_2)i(x)}), \Theta(P_{i(x_1)i(y_1)i(y_2)}, P_{i(x)i(y_1)i(y_2)}) < \frac{10\epsilon}{R}$ holds.*

□

Remark 6.2.7. *Note that since $\widetilde{W}$ may contains other 1-cells that intersect with R, the definition of $i|_R : R \to i(R)$ does not exactly coincide with $r : Q \to Q'$. However, since there are at most two such 1-cells intersecting with R, and they only intersect with $\overline{y_1y_2}$, these two maps are only different on $\overline{y_1y_2}$ by an error of at most $100\frac{\epsilon}{R}$. So the estimations in Lemma 6.2.5 still hold in this case, with $80\sqrt{\frac{\epsilon}{R}}$ replaced by $100\sqrt{\frac{\epsilon}{R}}$.*

Take two points $x, y \in \widetilde{Z}^{(1)}$ lying in the same piece of $\widetilde{Z}$, such that $d_0(x, y) \geq \frac{R}{128}$. Let U be the piece of $\widetilde{Z}$ that contains x and y, and let γ be the shortest path from x to y in $(\widetilde{Z}, d_0)$, then γ lies in U.

Now we need to give estimations for the length and angle change for $\overline{i(x)i(y)}$ under certain coordinate. To formulate the estimation, we need to give the following setting of coordinate of angles, which is similar with the formulation of Theorem 6.2.4.

Let t be the 1-cell in $\widetilde{Z}$ which contains x. If x lies in $\widetilde{Z}^{(0)}$, choose any such t which lies in U, and there are two choices of t. We give an orientation on t such that x is closer with the initial point than the terminal point of t. Let the other oriented 1-cell which lies in U and share its initial point with t be t', and denote the intersection point of t and t' by z.

At the point $i_0(x) \in \mathbb{H}^3$, let $\vec{e}_1 \in T^1_{i_0(x)}(\mathbb{H}^3)$ be the tangent vector of $i_0(t)$ at $i_0(x)$. We use $P_{i_0(t)i_0(t')}$ to denote the hyperbolic plane containing $i_0(t)$ and $i_0(t')$, and let $\vec{e}_3$ be the unit normal vector of $P_{i_0(t)i_0(t')}$ at $i_0(x)$. Then we have an orthonormal frame $(\vec{e}_1, \vec{e}_2, \vec{e}_3)$ at $i_0(x)$, with $\vec{e}_2 = \vec{e}_3 \times \vec{e}_1$.

Let $\vec{v} \in T^1_{i_0(x)}(\mathbb{H}^3)$ be the unit tangent vector of $\overline{i_0(x)i_0(y)}$ at $i_0(x)$, θ be the angle between $\vec{v}$ and $\vec{e}_1$, and ϕ be the angle between $\vec{v}$ and $\vec{e}_3$. Then we define $\Theta(i_0(t), i_0(t'), \overline{i_0(x)i_0(y)}) = (\theta, \phi)$, and note that $\phi = \frac{\pi}{2}$.

$\Theta(i(t), i(t'), \overline{i(x)i(y)}) = (\theta', \phi')$ is defined by the same way, with i_0 replaced by i in the definition. We also have an orthonormal frame $(\vec{e}'_1, \vec{e}'_2, \vec{e}'_3)$ at $i(x)$ (as the frame $(\vec{e}_1, \vec{e}_2, \vec{e}_3)$ at $i_0(x)$). Then we have the following estimation.

Proposition 6.2.8. *For any $0 < \delta < 1$, there exists constants $\hat{\epsilon} > 0$ and $\hat{R} > 0$, such that for any positive numbers $0 < \epsilon < \hat{\epsilon}$ and $R > \hat{R}$, the following statement holds. For two points $x, y \in \widetilde{Z}^{(1)}$ as above, with corresponding 1-cells t and t', the following estimations hold.*

- $\frac{1}{2}d(i_0(x), i_0(y)) < d(i(x), i(y)) < 2d(i_0(x), i_0(y))$.
- $|\Theta(i_0(t), i_0(t'), \overline{i_0(x)i_0(y)}) - \Theta(i(t), i(t'), \overline{i(x)i(y)})| = |(\theta - \theta', \frac{\pi}{2} - \phi')| < \delta$.

Proof. Let γ be the shortest path in $(\widetilde{Z}, d_0)$ from x to y, then γ lies in a piece of $\widetilde{Z}$ by assumption, which is denoted by U. Let $\widetilde{S}$ be the component of the preimage of S_i which is contained in U, and let β be the component of $\partial\widetilde{S}$ that is the closest one to x.

The estimations clearly holds if $\gamma \subset \widetilde{Z}^{(1)}$. So there are two cases to consider, either γ does not intersect with $\widetilde{S}$ (but also does not lie in $\widetilde{Z}^{(1)}$), or γ intersects with $\widetilde{S}$.

In the following, we suppose that $\hat{\epsilon} > 0$ is so small and $\hat{R} > 0$ is so large such that $\frac{\hat{\epsilon}}{\hat{R}} < \frac{\delta^{10}}{10^{40}}$ holds.

Case I. γ does not intersect with $\widetilde{S}$, then the picture near γ looks like Figure 10, with $d_0(x, y) > \frac{R}{128}$.

Let ω be the concatenation of geodesic arcs in U from x to y as in Figure 10 (part of ω is drawn by dashed lines). For each geodesic arc in ω, the length of its image under i_0 and under i differ by at most $\frac{\epsilon}{R}$, and the angle between the image of two adjacent arcs under i_0 (which is $2\theta_0$) and under i differ by at most $\frac{2\epsilon}{R}$. Since $d_0(x, y) > \frac{R}{128}$, an exercise in hyperbolic geometry gives the first estimation:

$$\frac{1}{2} d(i_0(x), i_0(y)) < d(i(x), i(y)) < 2d(i_0(x), i_0(y)). \tag{6.8}$$

Actually, the constant 2 can be replaced by $1 + \epsilon'$ for some small positive constant ϵ'.

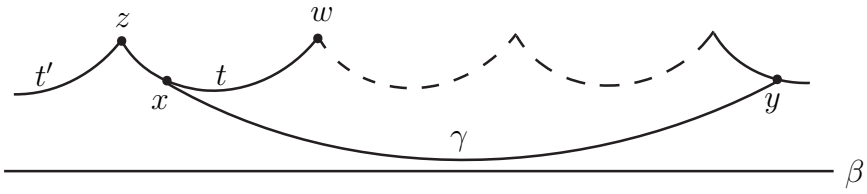

Figure 10

Let x' and y' be the nearest point projection of $i_0(x)$ and $i_0(y)$ on $i_0(\beta)$ respectively, and let x'' and y'' be the nearest point projection of $i(x)$ and $i(y)$ on $i(\beta)$ respectively. Since $\sin\theta_0 = \sqrt{\frac{5-\sqrt{5}}{10}}$, $d(x', i_0(x)), d(y', i_0(y)), d(x'', i(x)), d(y'', i(y))$ are all less than $\cosh^{-1}(\csc\theta_0) + \frac{10\epsilon}{R} < 2$.

By the definition of θ and θ', $\theta = \angle i_0(w) i_0(x) i_0(y)$ and $\theta' = \angle i(w) i(x) i(y)$. Since $d(i_0(x), i_0(y)), d(i(x), i(y)) > \frac{R}{256}$ and $d(i_0(y), y')$, $d(i(y), y'') < 2$, we have $\angle i_0(y) i_0(x) y'$, $\angle i(y) i(x) y'' < 10e^{-\frac{R}{256}}$. Moreover, since $d(i_0(x), y')$, $d(i(x), y'') > \frac{R}{256} -$

2, and $|d(i_0(x),x')-d(i(x),x'')|<100\sqrt{\frac{\epsilon}{R}}$ (Lemma 6.2.5), $|\angle x'i_0(x)y'-\angle x''i(x)y''|<50(\frac{\epsilon}{R})^{\frac{1}{4}}$ holds.

Note that the fifth estimation in Lemma 6.2.6 implies $\Theta(P_{i(z)i(w)x''},P_{i(x)x''y''})<\frac{10\epsilon}{R}$, and the third estimation in Lemma 6.2.5 gives $|\angle i_0(z)i_0(x)x'-\angle i(z)i(x)x''|<100\sqrt{\frac{\epsilon}{R}}$. So

$$\begin{aligned}
&|\theta-\theta'|=|\angle i_0(w)i_0(x)i_0(y)-\angle i(w)i(x)i(y)|\\
\leq&|\angle i_0(w)i_0(x)y'-\angle i(w)i(x)y''|+\angle i_0(y)i_0(x)y'+\angle i(y)i(x)y''\\
\leq&|\angle i_0(z)i_0(x)y'-\angle i(z)i(x)y''|+20e^{-\frac{R}{256}}\\
\leq&|\angle i_0(z)i_0(x)x'-\angle i(z)i(x)x''|+|\angle x'i_0(x)y'-\angle x''i(x)y''|\\
&+\Theta(P_{i(z)i(w)x''},P_{i(x)x''y''})+20e^{-\frac{R}{256}}\\
\leq&100\sqrt{\frac{\epsilon}{R}}+50(\frac{\epsilon}{R})^{\frac{1}{4}}+\frac{10\epsilon}{R}+20e^{-\frac{R}{256}}<\frac{\delta}{2}.
\end{aligned}\tag{6.9}$$

We will use $P_{i(t)i(t')}$ to denote the hyperbolic plane containing $i(t)$ and $i(t')$. Let $\vec{v}$ be the tangent vector of $\overline{i(x)i(y)}$ at $i(x)$, and $\vec{n}$ be the normal vector of $P_{i(t)i(t')}$ at $i(x)$. Then $\phi'=\Theta(\vec{v},\vec{n})$, and we need to estimate $|\Theta(\vec{v},\vec{n})-\frac{\pi}{2}|$.

Let $\vec{v}'$ be the tangent vector of $\overline{i(x)y''}$ at $i(x)$, we have known that $\Theta(\vec{v},\vec{v}')=\angle i(y)i(x)y''<10e^{-\frac{R}{256}}$. Let z'' be the nearest point projection of $i(z)$ on $i(\beta)$, then the fifth estimation of Lemma 6.2.6 implies

$$\Theta(P_{i(z)z''i(w)},P_{i(z)z''y''}),\Theta(P_{i(z)z''y''},P_{i(x)z''y''})<10\frac{\epsilon}{R}.\tag{6.10}$$

A similar estimation gives $\Theta(P_{i(t)i(t')},P_{i(z)z''y''})<20\frac{\epsilon}{R}$.

So we have

$$
\begin{aligned}
&|\Theta(\vec{v},\vec{n})-\frac{\pi}{2}| \le \Theta(\vec{v},\vec{v}')+|\Theta(\vec{v}',\vec{n})-\frac{\pi}{2}| \le 10e^{-\frac{R}{256}}+\Theta(P_{i(t)i(t')},P_{i(x)z''y''})\\
\le& 10e^{-\frac{R}{256}}+\Theta(P_{i(t)i(t')},P_{i(z)z''i(w)})+\Theta(P_{i(z)z''i(w)},P_{i(x)z''y''})\\
\le& 10e^{-\frac{R}{256}}+\Theta(P_{i(t)i(t')},P_{i(z)z''y''})+2\Theta(P_{i(z)z''i(w)},P_{i(z)z''y''})+\Theta(P_{i(z)z''y''},P_{i(x)z''y''})\\
\le& 10e^{-\frac{R}{256}}+50\frac{\epsilon}{R}<\frac{\delta}{2}.
\end{aligned}
\tag{6.11}
$$

So $|(\theta-\theta',\frac{\pi}{2}-\phi')|<\delta$.

Case II. γ intersects with $\widetilde{S}$, then $d_0(x,y)>\frac{R}{2}$ by step IV of the construction in Section 4.3. Let $\bar{x}$ be the intersection point of β and γ, and let $\bar{y}$ be the other intersection point in $\partial\widetilde{S}\cap\gamma$ which is close with y. Let α be the component of the preimage of a seam in U that intersects with β, and is the closest one from $\bar{x}$. Then the picture near x is as shown in Figure 11. Give β an orientation which points to the left in Figure 11, and note that the orientation of t also points to the left.

Let m be the middle point of $\overline{i(\bar{x})i(\bar{y})}$ in $\mathbb{H}^3$. Since $d_0(\bar{x},\bar{y})\ge\frac{R}{2}$ and $i|_{\widetilde{S}\cap\widetilde{W}}:\widetilde{S}\cap\widetilde{W}\to\mathbb{H}^3$ is an $(1+K\frac{\epsilon}{R},1)$-quasi-isometric embedding, $d(i(\bar{x}),i(\bar{y}))>\frac{R}{3}$ holds. So $d(i(\bar{x}),m),d(i(\bar{y}),m)>\frac{R}{6}$.

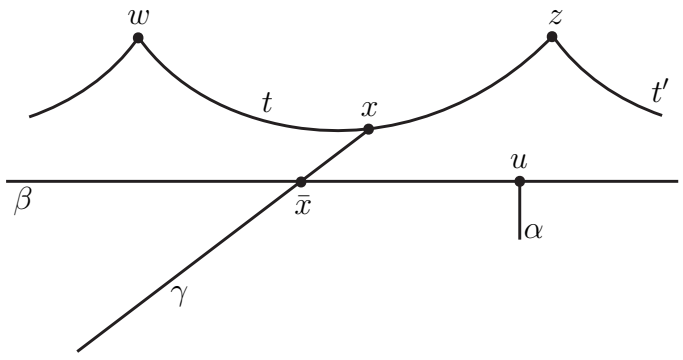

Figure 11

Now we make the following claim for x and $\bar{x}$, and the same estimations for y and $\bar{y}$ also hold.

- $\frac{2}{3}d(m,i(x)) < d_0(x,\bar{x}) + \frac{1}{2}d_0(\bar{x},\bar{y}) < \frac{3}{2}d(m,i(x))$.
- $\angle i(x)mi(\bar{x}) < \frac{\delta}{10}$.
- $|\Theta(i_0(t),i_0(t'),\overline{i_0(x)i_0(y)}) - \Theta(i(t),i(t'),\overline{i(x)m})| < \frac{\delta}{5}$.

This claim implies the statement of Proposition 6.2.8 by the following argument. Since $\angle i(x)mi(\bar{x}) < \frac{\delta}{10}$ and $\angle i(y)mi(\bar{y}) < \frac{\delta}{10}$, $\angle i(x)mi(y) > \pi - \frac{\delta}{5}$ holds. By the first estimation in the claim,

$$d(i(x),i(y)) \leq d(i(x),m) + d(m,i(y)) < \frac{3}{2}(d_0(x,\bar{x}) + d_0(\bar{x},\bar{y}) + d_0(y,\bar{y})) < 2d_0(x,y), \tag{6.12}$$

and

$$d(i(x),i(y)) \geq d(m,i(x)) + d(m,i(y)) - 1 \geq \frac{2}{3}d_0(x,y) - 1 \geq \frac{1}{2}d_0(x,y). \tag{6.13}$$

Moreover $\angle i(x)mi(y) > \pi - \frac{\delta}{5}$ implies $\angle mi(x)i(y) < \frac{\delta}{5}$. Then the third estimation in the claim implies $|\Theta(i_0(t),i_0(t'),\overline{i_0(x)i_0(y)}) - \Theta(i(t),i(t'),\overline{i(x)i(y)})| < \delta$.

Now, we need only to prove the claim, and there are two subcases to consider: $d_0(x,\bar{x}) < \frac{\delta}{1000}$ and $d_0(x,\bar{x}) \geq \frac{\delta}{1000}$.

Subcase I. $d_0(x,\bar{x}) < \frac{\delta}{1000}$.

In this subcase, there might be a big difference between $\angle i_0(w)i_0(x)i_0(\bar{x})$ and $\angle i(w)i(x)i(\bar{x})$. However, since $d_0(x,\bar{x}) < \frac{\delta}{1000}$ is very small, it will not affect the estimation very much.

By the first estimation of Proposition 6.2.4, $d(m,i(\bar{x})) > \frac{R}{6}$ and $\frac{3}{4}d(m,i(\bar{x})) < \frac{1}{2}d_0(\bar{x},\bar{y}) < \frac{4}{3}d(m,i(\bar{x}))$ hold. By the first and the second estimation of Proposition 6.2.5, we also have $d(i(x),i(\bar{x})) < \frac{\delta}{250}$.

So

$$\begin{aligned}&\frac{2}{3}d(m,i(x))\leq\frac{2}{3}(d(m,i(\bar{x}))+d(i(\bar{x}),i(x)))<\frac{3}{4}d(m,i(\bar{x}))\\<&\frac{1}{2}d_0(\bar{x},\bar{y})<d_0(x,\bar{x})+\frac{1}{2}d_0(\bar{x},\bar{y}),\end{aligned}\tag{6.14}$$

and

$$\begin{aligned}&d_0(x,\bar{x})+\frac{1}{2}d_0(\bar{x},\bar{y})<\frac{\delta}{1000}+\frac{4}{3}d(m,i(\bar{x}))\\\leq&\frac{\delta}{1000}+\frac{4}{3}(d(m,i(x))+d(i(x),i(\bar{x})))<\frac{3}{2}d(m,i(x))\end{aligned}\tag{6.15}$$

hold, thus the first estimation in the claim is true.

Moreover, since $d(i(x),i(\bar{x}))<\frac{\delta}{250}$ and $d(m,i(\bar{x}))>\frac{R}{6}$, $\angle i(x)mi(\bar{x})<\frac{\delta}{10}$ holds.

Now it remains to show the third estimation in the claim.

Let w'' be the nearest point projection of $i(w)$ on $i(\beta)$. By the choice of the orientation of t, $d_0(w,x)\geq d_0(z,x)$ holds, so we have $d(i(w),i(x))\geq\frac{R}{4}$. Since $d(i(w),w'')\leq 2$, we have $\angle i(w)i(x)w''<10e^{-\frac{R}{4}}$. Moreover, since $d(w'',i(\bar{x}))\geq\frac{R}{4}-3$, $d(m,i(\bar{x}))\geq\frac{R}{6}$, and $d(i(x),i(\bar{x}))<\frac{\delta}{250}$, $\angle i(x)w''i(\bar{x}),\angle i(x)mi(\bar{x})<\delta\cdot e^{-\frac{R}{6}}$ holds.

Let $\vec{v}_1$ be the tangent vector of $i(t)$ at $i(x)$, $\vec{v}_2$ be the tangent vector of $\overline{i(x)m}$ at $i(x)$, and $\vec{v}_3$ be the tangent vector of $\overline{i(x)w''}$ at $i(x)$. Let $\vec{u}_1$ be the tangent vector of $i(\beta)$ at $i(\bar{x})$ and $\vec{u}_2$ be the tangent vector of $\overline{i(\bar{x})m}$ at $i(\bar{x})$.

Then we have

$$\begin{aligned}&|\angle i(w)i(x)m-\angle w''i(\bar{x})m|=|\Theta(\vec{v}_1,\vec{v}_2)-\Theta(\vec{u}_1,\vec{u}_2)|\\\leq&\Theta(\vec{v}_1,\vec{v}_3)+\Theta(\vec{v}_3,\vec{u}_1@i(x))+\Theta(\vec{v}_2,\vec{u}_2@i(x))\\\leq&\angle i(w)i(x)w''+\Theta(\vec{v}_3@w'',\vec{u}_1@w'')+\Theta(\vec{u}_1@w'',\vec{u}_1@i(x)@w'')\\&+\Theta(\vec{v}_2@m,\vec{u}_2@m)+\Theta(\vec{u}_2@m,\vec{u}_2@i(x)@m)\\\leq&\angle i(w)i(x)w''+\angle i(x)w''i(\bar{x})+d(i(x),i(\bar{x}))+\angle i(x)mi(\bar{x})+d(i(x),i(\bar{x}))\\\leq&10e^{-\frac{R}{4}}+\delta\cdot e^{-\frac{R}{6}}+\frac{\delta}{250}+\delta\cdot e^{-\frac{R}{6}}+\frac{\delta}{250}<\frac{\delta}{100}.\end{aligned}\tag{6.16}$$

Here $\Theta(\vec{u}_1@w'', \vec{u}_1@i(x)@w'') < d(i(x), i(\bar{x}))$ holds by Proposition 4.1 of [20].

Let w' be the nearest point projection of $i_0(w)$ on $i_0(\beta)$, then a similar (actually easier) argument shows

$$|\angle i_0(w)i_0(x)i_0(y) - \angle w' i_0(\bar{x})i_0(y)| < \frac{\delta}{100}. \tag{6.17}$$

Note that the first coordinate of $|\Theta(i_0(t), i_0(t'), \overline{i_0(x)i_0(y)}) - \Theta(i(t), i(t'), \overline{i(x)m})|$ equals $|\angle i_0(w)i_0(x)i_0(y) - \angle i(w)i(x)m|$, while the second estimation of Proposition 6.2.4 implies $|\angle w' i_0(\bar{x})i_0(\bar{y}) - \angle w'' i(\bar{x})i(\bar{y})| < \frac{\delta}{100}$. So

$$\begin{aligned}
&|\angle i_0(w)i_0(x)i_0(y) - \angle i(w)i(x)m| \\
\leq &|\angle i_0(w)i_0(x)i_0(y) - \angle w' i_0(\bar{x})i_0(\bar{y})| + |\angle i(w)i(x)m - \angle w'' i(\bar{x})m| \\
&+ |\angle w' i_0(\bar{x})i_0(\bar{y}) - \angle w'' i(\bar{x})m| \\
\leq &\frac{\delta}{100} + \frac{\delta}{100} + \frac{\delta}{100} < \frac{\delta}{10}.
\end{aligned} \tag{6.18}$$

Let m' be the nearest point projection of m on $P_{i(t)i(t')}$, and $\bar{x}'$ be the nearest point projection of $i(\bar{x})$ on $P_{i(t)i(t')}$, then $d(\bar{x}', i(\bar{x})) \leq \frac{\delta}{250}$. Note that the second coordinate of $|\Theta(i_0(t), i_0(t'), \overline{i_0(x)i_0(y)}) - \Theta(i(t), i(t'), \overline{i(x)m})|$ equals $\angle m i(x) m'$.

Let $\vec{n}$ be the normal vector of $P_{i(t)i(t')}$ at $i(x)$ and $\vec{n}'$ be the normal vector of $P_{i(x)i(\beta)}$ (hyperbolic plane containing $i(x)$ and $i(\beta)$) at $i(\bar{x})$ (with almost coincide direction with $\vec{n}$). Then by the estimation of $\Theta(P_{i(t)i(t')}, P_{i(x)i(\beta)})$ in equation (6.11), we have

$$\Theta(\vec{n}'@i(x), \vec{n}) = \Theta(P_{i(t)i(t')}, P_{i(x)i(\beta)}) \leq 50\frac{\epsilon}{R}. \tag{6.19}$$

So

$$\angle(\vec{n}'@\bar{x}', \vec{n}@\bar{x}') \leq \angle(\vec{n}'@\bar{x}', \vec{n}'@i(x)@\bar{x}') + \angle(\vec{n}'@i(x), \vec{n}) \leq \frac{\delta}{250} + 50\frac{\epsilon}{R} \leq \frac{\delta}{200}. \tag{6.20}$$

Then we have

$$\begin{aligned}
&\sinh d(m,m') \\
\leq &\sinh d(i(\bar{x}),\bar{x}')\cosh d(i(\bar{x}),m) + \cosh d(i(\bar{x}),\bar{x}')\sinh d(i(\bar{x}),m)\sin\angle(\vec{n}'@\bar{x}',\vec{n}@\bar{x}') \\
\leq &\frac{\delta}{100}\cosh d(i(\bar{x}),m) + \frac{\delta}{100}\sinh d(i(\bar{x}),m).
\end{aligned} \tag{6.21}$$

This inequality implies

$$\sin\angle mi(x)m' = \frac{\sinh d(m,m')}{\sinh d(i(x),m)} \leq \frac{\frac{\delta}{100}\cosh d(i(\bar{x}),m) + \frac{\delta}{100}\sinh d(i(\bar{x}),m)}{\sinh\left(d(i(\bar{x}),m) - \frac{\delta}{250}\right)} \leq \frac{\delta}{20}. \tag{6.22}$$

So $\angle mi(x)m' \leq \frac{\delta}{10}$, and we finish the proof in the first subcase.

Subcase II. $d_0(x,\bar{x}) \geq \frac{\delta}{1000}$.

By the first two estimations of Lemma 6.2.5 and $d_0(x,\bar{x}) \geq \frac{\delta}{1000}$, we have that

$$\frac{3}{4}d(i(x),i(\bar{x})) < d_0(x,\bar{x}) < \frac{4}{3}d(i(x),i(\bar{x})) \tag{6.23}$$

holds, while the first estimation of Theorem 6.2.4 implies

$$\frac{3}{4}d(m,i(\bar{x})) < \frac{1}{2}d_0(x,y) < \frac{4}{3}d(m,i(\bar{x})). \tag{6.24}$$

Now let us estimate $\angle mi(\bar{x})i(x)$. Let x' be the nearest point projection of $i_0(x)$ on $i_0(\beta)$ and x'' be the nearest point projection of $i(x)$ on $i(\beta)$.

If $d(x', i_0(\bar{x})) \geq R$, then $d(i_0(x), i_0(\bar{x})) \geq R$, and $d(i(x), i(\bar{x})) \geq \frac{R}{2}$ hold. Since $d(i_0(x), x')$, $d_0(i(x), x'') < 2$, we have $\angle i_0(x)i_0(\bar{x})x', \angle i(x)i(\bar{x})x'' \leq 10e^{-\frac{R}{2}}$. By the second estimation of Proposition 6.2.4, $\angle i_0(x)i_0(\bar{x})x' \leq 10e^{-\frac{R}{2}}$ implies $\angle mi(\bar{x})x'' \geq \pi - 10e^{-\frac{R}{2}} - (\frac{\delta}{300})^2$. So $\angle mi(\bar{x})i(x) \geq \pi - 20e^{-\frac{R}{2}} - (\frac{\delta}{300})^2 \geq \pi - \frac{\delta}{25}$.

If $d(x', i_0(\bar{x})) < R$, then x' and $i_0(\bar{x})$ lie in the image of at most two adjacent 1-cells in $\widetilde{Z}$, under the nearest point projection to $i_0(\beta)$. Then the first two estimations

in Lemma 6.2.5 implies

$$|\Theta(i_0(\beta), i_0(\alpha), \overline{i_0(\bar{x})i_0(x)}) - \Theta(i(\beta), i(\alpha), \overline{i(\bar{x})i(x)})| < 10^4(\frac{\epsilon}{R})^{\frac{1}{4}}\delta^{-\frac{1}{2}}. \tag{6.25}$$

The second estimation of Theorem 6.2.4 gives

$$|\Theta(i_0(\beta), i_0(\alpha), \overline{i_0(\bar{x})i_0(\bar{y})}) - \Theta(i(\beta), i(\alpha), \overline{i(\bar{x})m})| < (\frac{\delta}{300})^2. \tag{6.26}$$

Then an elementary computation in spherical geometry gives

$$\angle mi(\bar{x})i(x) \geq \pi - 3\sqrt{(\frac{\delta}{300})^2} - 3\sqrt{10^4(\frac{\epsilon}{R})^{\frac{1}{4}}\delta^{-\frac{1}{2}}} \geq \pi - \frac{\delta}{25}. \tag{6.27}$$

So $\angle mi(\bar{x})i(x) \geq \pi - \frac{\delta}{25}$ always holds.

By (6.23), (6.24) and (6.27), we have:

$$\begin{aligned} &\frac{2}{3}d(m, i(x)) < \frac{2}{3}(d(m, i(\bar{x}) + d(i(\bar{x}), i(x))) < \frac{1}{2}d_0(x, y) + d_0(x, \bar{x}) \\ &< \frac{4}{3}(d(m, i(\bar{x})) + d(i(x), i(\bar{x}))) < \frac{4}{3}(d(m, i(x)) + 1) < \frac{3}{2}d(m, i(x)). \end{aligned} \tag{6.28}$$

Moreover, $\angle mi(\bar{x})i(x) \geq \pi - \frac{\delta}{25}$ implies $\angle i(x)mi(\bar{x}) < \frac{\delta}{10}$ and $\angle mi(x)i(\bar{x}) < \frac{\delta}{25}$.

The estimations in Lemma 6.2.5 also imply the following estimation (by considering the cases that $d_0(x', i_0(\bar{x})) \geq R$ and $d_0(x', i_0(\bar{x})) < R$)

$$|\Theta(i_0(t), i_0(t'), \overline{i_0(x)i_0(\bar{x})}) - \Theta(i(t), i(t'), \overline{i(x)i(\bar{x})})| < 10^4(\frac{\epsilon}{R})^{\frac{1}{4}}\delta^{-1} < \frac{\delta}{25}. \tag{6.29}$$

Then equation (6.29) and $\angle mi(x)i(\bar{x}) < \frac{\delta}{25}$ together give the desired estimation:

$$|\Theta(i_0(t), i_0(t'), \overline{i_0(x)i_0(y)}) - \Theta(i(t), i(t'), \overline{i(x)m})| < \frac{\delta}{5}. \tag{6.30}$$

□

Now we are ready to prove Theorem 6.2.3, which finishes the proof of Theorem 1.2.5.

Proof. Choose constants $\hat{\epsilon} > 0$ and $\hat{R} > 0$ such that Proposition 6.2.8 holds for $\delta = (\frac{\pi}{360})^2$.

For any two points $x, y \in \widetilde{Z}^{(0)}$, let γ be the shortest path in $(\widetilde{Z}, d_0)$ from x to y, γ' be the modified path of γ, and $y_1, y_2, \cdots, y_m$ be the corresponding modified sequence.

Note that since $x, y \in \widetilde{Z}^{(0)}$, $d_0(x, y_1), d_0(y_m, y) \geq \frac{R}{2}$ holds. γ' is a concatenation of geodesic arcs $\gamma_0, \gamma_1, \cdots, \gamma_m$ in $(\widetilde{Z}, d_0)$, which connect the sequence of points $y_0 = x, y_1, y_2, \cdots, y_m, y_{m+1} = y$. Here each γ_i lies in a piece of $\widetilde{Z}$, with length greater than $\frac{R}{128}$, for $i = 0, 1, \cdots, m$. Moreover, in the proof of Proposition 6.1.1, we have shown that, for adjacent geodesic arcs $i_0(\gamma_i)$ and $i_0(\gamma_{i+1})$, the angle between them is greater than $\frac{\pi}{18}$.

In the first estimation of Proposition 6.2.8, we showed that $d(i(y_i), i(y_{i+1})) < 2d_0(y_i, y_{i+1})$. While equation (6.6) in the proof of Proposition 6.1.1 implies that $\sum_{i=0}^{m} d(i_0(y_i), i_0(y_{i+1})) \leq \frac{10}{9} d(i_0(x), i_0(y)) \leq \frac{10}{9} d_0(x, y)$. So

$$d(i(x), i(y)) \leq \sum_{i=0}^{m} d(i(y_i), i(y_{i+1})) \leq 2 \sum_{i=0}^{m} d_0(y_i, y_{i+1}) \leq 3 d_0(x, y). \tag{6.31}$$

On the other hand, the second estimation in Proposition 6.2.8 implies the following statement. Let $\vec{u}_1 \in S^2$ that corresponds with the tangent vector of $i_0(\gamma_i)$ at $i_0(y_{i+1})$ (under frame $(\vec{e}_1, \vec{e}_2, \vec{e}_3)$ at $i_0(y_{i+1})$), and $\vec{u}_2 \in S^2$ that corresponds with the tangent vector of $\overline{i(y_{i+1})i(y_i)}$ at $i(y_{i+1})$ (under frame $(\vec{e}'_1, \vec{e}'_2, \vec{e}'_3)$ at $i(y_{i+1})$), then $\Theta(\vec{u}_1, \vec{u}_2) \leq \frac{\pi}{90}$. Since we have shown that the angle between $i_0(\gamma_i)$ and $i_0(\gamma_{i+1})$ is greater than $\frac{\pi}{18}$ in the Proof of Proposition 6.1.1, the angle between $\overline{i(y_{i+1})i(y_i)}$ and $\overline{i(y_{i+1})i(y_{i+2})}$ is greater than $\frac{\pi}{36}$.

Since the length of $\overline{i(y_{i+1})i(y_i)}$ equals $d(i(y_i), i(y_{i+1}))$, which is greater than $\frac{R}{256}$, then Lemma 4.8 of [25] implies

$$\begin{aligned} d(i(x), i(y)) &\geq \sum_{i=0}^{m} d(i(y_i), i(y_{i+1})) - 2m(\log(\csc\frac{\pi}{72}) + 1) \\ &\geq \frac{1}{2}\sum_{i=0}^{m} d(i(y_i), i(y_{i+1})) \geq \frac{1}{4}\sum_{i=0}^{m} d_0(y_i, y_{i+1}) \geq \frac{1}{4}d_0(x, y). \end{aligned} \tag{6.32}$$

So $i : (\widetilde{W}, d_0|_{\widetilde{W}}) \to (\mathbb{H}^3, d_{\mathbb{H}^3})$ is a quasi-isometric embedding. □

Chapter 7

Further questions and directions

7.1 Further questions

In the proof of Theorem 1.2.3 and Theorem 1.2.5, we used Kahn-Markovic and Liu-Markovic's constructions of immersed almost totally geodesic subsurfaces ([20], [25]). However, since these works require that the manifold has its injectivity radius bounded away from 0, the constructions do not work for hyperbolic 3-manifolds with cusps. So we can not show similar results for cusped manifolds, and we list a few natural questions related to cusped hyperbolic 3-manifolds.

Question 7.1.1. *For any finite abelian group A, and any cusped hyperbolic 3-manifold M (or closed 3-manifold with positive simplicial volume), whether M admits a finite cover M', such that A is a direct summand of (or embeds into) $H_1(M';\mathbb{Z})$?*

Since closed 3-manifolds with vanishing simplicial volume do not virtually dominate any closed hyperbolic 3-manifold, we also have the following question related with Theorem 1.2.5.

Question 7.1.2. *For any closed oriented 3-manifold M with positive simplicial volume, and any closed oriented 3-manifold N, whether M admits a finite cover M', such that there is a nonzero degree map $f : M' \to N$?*

To give a positive answer to Question 7.1.2, it suffices to show that any irreducible closed oriented 3-manifold with a hyperbolic piece in its JSJ decomposition virtually dominates some closed oriented hyperbolic 3-manifold. Theorem 1.6 (1) in [11] gives some evidence for Question 7.1.2.

If one can extend Kahn-Markovic and Liu-Markovic's works to cusped hyperbolic 3-manifolds, then Question 7.1.1 and Question 7.1.2 can be confirmed.

It is also natural to ask whether the following result holds, which tries to strengthen Theorem 1.2.5 quantitatively.

Question 7.1.3. *For any closed oriented hyperbolic* 3*-manifold* M *(or closed oriented* 3*-manifold with positive simplicial volume), whether* M *virtually* 1*-dominates any closed oriented* 3*-manifold?*

We can only prove that virtual degree-2 map exists, but could not promote it to virtual degree-1 map, basically because of the $\mathbb{Z}_2$-valued invariant σ (see Corollary 2.3.3) introduced in Theorem 1.4 of [25].

7.2 A relation with pseudo-Anosov maps

In [23], Koberda asked the following interesting question about virtual properties of pseudo-Anosov maps, which is also related with the homological torsion growth of hyperbolic 3-manifolds.

Question 7.2.1. *For any pseudo-Anosov map* $\phi : S \to S$ *on a hyperbolic surface* S*, whether there exists a finite cover* (S', ϕ') *of* (S, ϕ)*, such that* $\phi'_* : H_1(S'; \mathbb{C}) \to H_1(S'; \mathbb{C})$ *has spectral radius* $\rho(\phi'_*)$ *greater than* 1*?*

The spectral radius of a linear map $A : \mathbb{C}^n \to \mathbb{C}^n$ is the maximum of the modulus of all the eigenvalues of A, and we will denote it by $\rho(A)$.

It is well known that the spectral radius $\rho(\phi'_*)$ is bounded above by the dilatation of the pseudo-Anosov map (S, ϕ). Actually, the supremum of all possible $\rho(\phi'_*)$ equals

the dilatation of the pseudo-Anosov map (S, ϕ) if and only if all the singular points of (S, ϕ) have even indices ([34]). However, it is still unknown whether we can always find a finite cover (S', ϕ'), such that $\rho(\phi'_*)$ is greater than 1.

In the following, for an surface automorphism (S, ϕ), we will use $M(S, \phi)$ to denote the mapping torus of (S, ϕ).

Now we give a result which provides some connection between the virtual homological eigenvalue of pseudo-Anosov maps and virtual domination of 3-manifolds, and we only give a sketch of the proof here.

Proposition 7.2.2. *For two surface automorphisms (S, ϕ) and (Σ, ψ) on closed surfaces, suppose the following three condition holds.*

- *$M(S, \phi)$ admits a finite cover M, such that there exists a nonzero degree map $f : M \to M(\Sigma, \psi)$.*
- *$\psi_* : H_1(\Sigma; \mathbb{C}) \to H_1(\Sigma; \mathbb{C})$ has spectral radius greater than 1.*
- *Let $\alpha \in H^1(M(\Sigma, \psi); \mathbb{Z})$ be the cohomology class of $M(\Sigma, \psi)$ corresponding with the fiber surface Σ, then the corresponding Alexander polynomial of M satisfies $\Delta_M^{f^*(\alpha)} \neq 0$.*

Then (S, ϕ) admits a finite cover (S', ϕ'), such that $\phi'_* : H_1(S'; \mathbb{C}) \to H_1(S'; \mathbb{C})$ has spectral radius greater than 1.

Proof. Since M is a finite cover of $M(S, \phi)$, M has an induced surface bundle structure, and the monodromy (S', ϕ') is a finite cover of (S, ϕ^k) for some positive integer k. Since we are considering virtual homological eigenvalue of (S, ϕ), we will abuse notation and still use (S, ϕ) to denote (S', ϕ'), and use $M(S, \phi)$ to denote M. We can also assume that f is a π_1 surjective map of degree $d \in \mathbb{Z}_+$.

For a non-zero n-variable polynomial $F(z_1, \cdots, z_n) \in \mathbb{C}[z_1^{\pm 1}, \cdots, z_n^{\pm 1}]$, the Mahler measure of F is defined to be

$$\mathbb{M}(F) = \exp\left\{\int_{T^n} \ln|F(\vec{z})|\, \mathrm{d}\vec{t}\right\}.$$

Here $\vec{z}(\vec{t}) = (\exp 2\pi i t_1, \cdots, \exp 2\pi i t_n)$, and $T^n = \{\vec{t} \in \mathbb{R}^n |\ t_i \in [0,1],\ i = 1, \cdots, n\}$. When F is an single variable polynomial with leading coefficient 1, $\mathbb{M}(F)$ equals the product of the modulus of all the roots of F which are greater or equal to 1.

Since the Alexander polynomial $\Delta^{\alpha}_{M(\Sigma,\psi)}$ equals the characteristic polynomial of $\psi_* : H_1(\Sigma;\mathbb{C}) \to H_1(\Sigma;\mathbb{C})$, and we have know that ψ_* has spectral radius greater than 1, $\mathbb{M}(\Delta^{\alpha}_{M(\Sigma,\psi)}) > 1$ holds.

Let $M(\Sigma,\psi)_k$ be the k-sheet cyclic cover of $M(\Sigma,\psi)$ given by $\pi_1(M(\Sigma,\psi)) \xrightarrow{\alpha} \mathbb{Z} \to \mathbb{Z}/k$. Then by the result in [24] (essentially given in [40]), we have

$$\lim_{k\to\infty} \frac{\ln|Tor(H_1(M(\Sigma,\psi)_k;\mathbb{Z}))|}{k} = \ln \mathbb{M}(\Delta^{\alpha}_{M(\Sigma,\psi)}) > 0.$$

Let $M(S,\phi)_k$ be the corresponding k-sheet cyclic cover of $M(S,\phi)$ given by $\pi_1(M(S,\phi)) \xrightarrow{f^*(\alpha)} \mathbb{Z} \to \mathbb{Z}/k$. Since f is a π_1-surjective map, we have an induced degree-d map $f_k : M(S,\phi)_k \to M(\Sigma,\psi)_k$.

An exercise in algebraic topology shows that

$$|Tor(H_1(M(S,\phi)_k;\mathbb{Z}))| \geq \frac{|Tor(H_1(M(\Sigma,\psi)_k;\mathbb{Z}))|}{d^{rank(\pi_1(M(\Sigma,\psi)_k))}} \geq \frac{|Tor(H_1(M(\Sigma,\psi)_k;\mathbb{Z}))|}{d^{2g(\Sigma)+1}}.$$

Since $\Delta^{f^*(\alpha)}_{M(S,\phi)} \neq 0$, we have

$$\begin{aligned}
\ln \mathbb{M}(\Delta^{f^*(\alpha)}_{M(S,\phi)}) &= \lim_{k\to\infty} \frac{\ln|Tor(H_1(M(S,\phi)_k;\mathbb{Z}))|}{k} \\
&\geq \lim_{k\to\infty} \frac{\ln|Tor(H_1(M(\Sigma,\psi)_k;\mathbb{Z}))| - (2g(\Sigma)+1)\ln d}{k} \\
&= \ln \mathbb{M}(\Delta^{\alpha}_{M(\Sigma,\psi)}) > 0.
\end{aligned}$$

In [7], Boyd showed that, if an integer coefficient polynomial $F(z_1, \cdots, z_n)$ satisfies $\mathbb{M}(F) = 1$, then F must be a product of compositions of cyclotomic polynomials and monomials. Let $\Delta_{M(S,\phi)}$ be the Alexander polynomial of $M(S,\phi)$ with respect to the maximal free abelian quotient of $\pi_1(M(S,\phi))$, then $\Delta^{f^*(\alpha)}_{M(S,\phi)}$ is essentially the image of $\Delta_{M(S,\phi)}$ under $f^*(\alpha) : \mathbb{Z}[H_1(M(S,\phi);\mathbb{Z})/Tor] \to \mathbb{Z}[\mathbb{Z}]$, at least when considering the Mahler measure.

Since we have known that $\mathbb{M}(\Delta^{f^*(\alpha)}_{M(S,\phi)}) > 1$, which implies that $\Delta_{M(S,\phi)}$ can not be a product of compositions of cyclotomic polynomials and monomials, so $\mathbb{M}(\Delta_{M_\phi}) > 1$.

By the definition of Mahler measure, and the property of Alexander polynomials under taking finite abelian cover, for large enough positive integer m, the following result holds. For the finite abelian cover of $M(S,\phi)$ given by the kernel of $\pi_1(M(S,\phi)) \to H_1(M(S,\phi);\mathbb{Z})/Tor \cong \mathbb{Z}^n \to \mathbb{Z}^n_m$, the monodromy of the induced fiber structure in the finite cover has at least one eigenvalue with modulus greater than 1. □

Given an arbitrary pseudo-Anosov map (S,ϕ) on a closed surface, take any preferred pseudo-Anosov map (Σ,ψ) with $\rho(\psi_*) > 1$. Since $M(S,\phi)$ is a hyperbolic 3-manifold ([36]), Theorem 1.2.5 implies that $M(S,\phi)$ virtually dominates $M(\Sigma,\psi)$. If the third condition in Proposition 7.2.2 also holds, i.e. we can control the Alexander polynomial, then the answer of Question 7.2.1 for this particular (S,ϕ) is positive.

We have no idea how to make the third condition in Proposition 7.2.2 holds in general. However, since the construction in the proof of Theorem 1.2.5 is quite flexible, Theorem 1.2.5 is a positive evidence for Question 7.2.1.

The advantage for surface automorphism is, for Question 7.2.1, if one can answer Question 7.2.1 for closed surfaces, then the case for surfaces with boundary is automatically settled. However, for the hyperbolic 3-manifolds counterpart, our current technique could only show some results for closed hyperbolic 3-manifolds, but the corresponding results for cusped 3-manifolds are still open.

Part II

A transcendental invariant of pseudo-Anosov maps

Chapter 8

Introduction

8.1 Background

Given a pseudo-Anosov map ϕ on an oriented surface S (possibly with boundary) with negative Euler characteristic, a natural object associated with (S, ϕ) is the mapping torus $M(S, \phi) = S \times I/(x, 0) \sim (\phi(x), 1)$. Thurston showed that $M(S, \phi)$ admits a complete hyperbolic metric with finite volume ([36]). Recently, Wise showed that every cusped hyperbolic 3-manifold has a finite cover which is a surface bundle over circle in [46], while Agol showed this result for closed hyperbolic 3-manifold (Virtual Fibered Conjecture) in [3]. So hyperbolic surface bundles are virtually all finite volume hyperbolic 3-manifolds.

In the following, we will always suppose $b_1(M(S, \phi)) > 1$. In this case, $N = M(S, \phi)$ has infinitely many different surface bundle over circle structures. These structures are organized by the Thurston norm on $H^1(N; \mathbb{R})$ ([43]). For any $\alpha \in H^1(N; \mathbb{Z})$ ($\cong H_2(N, \partial N; \mathbb{Z})$ by duality), the Thurston norm of α is defined by:

$$\|\alpha\| = inf\{|\chi(T_0)| \mid (T, \partial T) \subset (N, \partial N) \text{ is dual to } \alpha\}.$$

Here $T_0 \subset T$ excludes S^2 and D^2 components of T. Then this norm can be extended to $H^1(N;\mathbb{R})$ homogeneously and continuously, while the Thurston norm unit ball is a polyhedron with faces dual with elements in $H_1(N;\mathbb{Z})/Tor$. For an open face F of the Thurston norm unit ball, let the open cone over F denoted by C. Thurston showed that C contains an integer cohomology class that corresponds with a surface bundle over circle structure if and only if all the integer cohomology classes in C correspond with such structures. In this case, the face F is called a fibered face, and C is called a fibered cone.

Another important object associated with a pseudo-Anosov map ϕ is its dilatation $\lambda(\phi) \in \mathbb{R}_{>1}$. Given a pseudo-Anosov map ϕ, there is a pair of transverse singular measured foliations (equivalently geodesic measured laminations) $(\mathcal{F}^+, \mu^+), (\mathcal{F}^-, \mu^-)$ on S, such that $\mathcal{F}^+$ and $\mathcal{F}^-$ are preserved by ϕ and $\phi^*(\mu^+) = \lambda(\phi)\mu^+$, $\phi^*(\mu^-) = \frac{1}{\lambda(\phi)}\mu^-$. So for any integer cohomology class $\alpha \in C \cap H^1(N;\mathbb{Z})$, it is associated with a number $\lambda(\alpha)$, which is the dilatation of the corresponding monodromy map. For a rational point $\alpha/n \in C \cap H^1(N;\mathbb{Q})$, we can define $\lambda(\alpha/n) = \lambda(\alpha)^n$. So $\lambda(\cdot)$ is a function defined on $C \cap H^1(N;\mathbb{Q})$ now.

In [14], Fried showed that $\lambda(\cdot)$ can be extended to a continuous function on the fibered cone C. We will use notation $\lambda_C(\cdot)$ when we want to emphasize that this function is defined on C. Fried also showed that $\lambda(\alpha)$ goes to infinity when α goes to the boundary of C, and $\frac{1}{\log\lambda(\cdot)}$ is a concave function on C (see [26] for an alternative proof). Moreover, Matsumoto showed that $\frac{1}{\log\lambda(\cdot)}$ is strictly concave along rays not going through the original point ([30]). It implies that the restriction of $\lambda(\cdot)$ on the fibered face F has a unique minimal point, which is denoted by m_F.

In [32], McMullen defined the Teichmüller polynomial $\Theta_F \in \mathbb{Z}[H_1(N;\mathbb{Z})/Tor]$, which is in the form of $\Theta_F = \sum_g a_g \cdot g$ with $a_g \in \mathbb{Z},\ g \in H_1(N;\mathbb{Z})/Tor$. Using the Teichmüller polynomial Θ_F, one can compute $\lambda(\cdot)$ effectively: $\lambda(\alpha)$ is the largest root of polynomial $\sum_g a_g \cdot X^{\langle\alpha,g\rangle} = 0$ for any $\alpha \in C$. Using properties of the Teichmüller

polynomial, McMullen gave alternative proofs of Fried's and Matsumoto's theorem in [32]. We will briefly review McMullen's work in Chapter 9.

Knowing the existence and uniqueness of the minimal point m_F, McMullen asked the following question in [32]:

Question. Is the minimum always achieved at a rational cohomology class?

In this part of the thesis, we will construct a few examples to show that the minimal point need not to be a rational point, and the irrationality of the minimal point is a general phenomenon.

8.2 Main results

In the following, we assume all manifolds are oriented, all homeomorphisms preserve the fixed orientation. For a properly embedded surface S in a 3-manifold N, we may abuse notation and use $[S]$ to denote the element in $H^1(N;\mathbb{Z})$ dual with $[S,\partial S] \in H_2(N,\partial N;\mathbb{Z})$. We may also use c to denote the homology class of an oriented curve c in N.

For a pseudo-Anosov map ϕ on a surface S, we will define a finitely generated $\mathbb{Q}$-submodule $A(S,\phi)$ of $\mathbb{R}$. It is generated by the coordinates of m_F. More specifically, if $\{\alpha_i\}$ is a basis of $H^1(N;\mathbb{Z})$, and $m_F = \sum r_i\alpha_i$, then we define a $\mathbb{Q}$-submodule of $\mathbb{R}$:

$$A(S,\phi) = \{\sum q_i r_i \mid q_i \in \mathbb{Q}\}.$$

Since m_F lies on the fibered face F which is dual to an integer homology class, $\mathbb{Q}$ is always a submodule of $A(S,\phi)$.

Essentially, $A(S,\phi)$ is an invariant for the fibered cone C, sometimes we will also use A_C to denote $A(S,\phi)$. However, in most part of this thesis, we will only think $A(S,\phi)$ as an invariant of pseudo-Anosov maps. In Chapter 10, we will show a few nice properties of $A(S,\phi)$.

In Section 10.3, we will show that the coordinate r_i will be in the form of $\log(\alpha)/\log(\beta)$, here α, β are algebraic numbers. By an equivalent formulation of Hilbert's seventh problem, $\log(\alpha)/\log(\beta)$ is either a rational or a transcendental number ([13] Theorem 3.2). So we call $A(S,\phi)$ a transcendental invariant.

By the definition of $A(S,\phi)$, McMullen's question is equivalent to: whether $A(S,\phi) = \mathbb{Q}$ holds for all pseudo-Anosov maps. In Section 10.2, we will show that all pseudo-Anosov maps on relatively simple surfaces: $\Sigma_{0,4}, \Sigma_{1,2}, \Sigma_{2,0}$, always have $A(S,\phi) = \mathbb{Q}$ (here $\Sigma_{g,n}$ denote orientable surface of genus g with n boundary components). Actually, we will show that, if there is a group action on the mapping torus $M(S,\phi)$ which has a unique fixed point on the fibered face, then the fixed point is the rational minimal point.

On the other hand, in Chapter 11, we will give examples which does not have such group action on the mapping torus (geometric symmetry), but still have rational minimal points. These examples are constructed by Penner's construction [37]. In his construction, Penner took two families of disjoint simple closed curves $\{a_i\}$ and $\{b_j\}$ on a surface S, such that the union of $\{a_i\}$ and $\{b_j\}$ fill S. Let $\mathcal{D}(a^+, b^-)$ be the semigroup generated by positive twists along a curves and negative twists along b curves. For any $\phi \in \mathcal{D}(a^+, b^-)$ such that each twist along $\{a_i\}$ and $\{b_j\}$ appears at least once in the presentation of ϕ, Penner showed that ϕ is a pseudo-Anosov map and an invariant bigon track τ is constructed explicitly. Here τ only depends on the two families of curves $\{a_i\}$ and $\{b_j\}$, but does not depend on ϕ. In Proposition 11.2.1, we will show that for some special element $\phi \in \mathcal{D}(a^+, b^-)$, $A(S,\phi) = \mathbb{Q}$ holds. The minimal point is rational since there is an algebraic symmetry on the Teichmüller polynomial, but the mapping torus does not admit a geometric symmetry as in Section 10.2.

In Chapter 12, we will give various examples which have irrational minimal points. In Section 12.2.2, 12.2.3 and 12.3.1, we will give examples to show that for slightly

more complicated surfaces: $\Sigma_{2,1}, \Sigma_{3,0}, \Sigma_{1,3}$ and $\Sigma_{0,5}$, all these surfaces admit pseudo-Anosov maps with $A(S,\phi) \neq \mathbb{Q}$.

Since different integer classes in the same fibered cone C share the same invariant A_C, we can get a lot of different pseudo-Anosov maps with $A(S,\phi) \neq \mathbb{Q}$ if we are given one. Using the examples we have in hand, we can deduce the following theorem.

Theorem 8.2.1. *For surfaces $\Sigma_{g,0}$ with $g \geq 3$ and punctured surfaces $\Sigma_{g,1}$ with $g \geq 2$, all these surfaces admit pseudo-Anosov maps with $A(S,\phi) \neq \mathbb{Q}$.*

Actually, we believe that for all surfaces S with negative Euler characteristic and $S \neq \Sigma_{0,3}, \Sigma_{0,4}, \Sigma_{1,1}, \Sigma_{1,2}, \Sigma_{2,0}$, i.e. $|\chi(S)| \geq 3$, S admits a pseudo-Anosov map ϕ such that $A(S,\phi) \neq \mathbb{Q}$. However, we do not have enough examples to produce pseudo-Anosov maps with irrational minimal points on all these surfaces.

In the following part of this thesis, we will study two different constructions of pseudo-Anosov maps which may have $A(S,\phi) \neq \mathbb{Q}$.

First Construction. We will introduce the first construction in Section 12.1, it is given by drilling (or cyclic branched covering) along a closed orbit of the suspension flow. Suppose $N = M(S,\phi)$ is a closed hyperbolic surface bundle, c is a oriented closed orbit of the suspension flow and intersects with S positively. We drill the manifold N along c to get another hyperbolic surface bundle $N \setminus c$ with a natural inclusion $i: N \setminus c \to N$. For the dilatation function, $\lambda(\alpha) = \lambda(i^*(\alpha))$ for α lying in the fibered cone C. However, for the Thurston norm, $\|i^*(\alpha)\| = \|\alpha\| + \langle \alpha, c \rangle$. The difference between $\|i^*(\alpha)\|$ and $\|\alpha\|$ depends on the cohomology class α, which may produce irrationality.

The fibered cone C corresponds to a homology class $x \in H_1(N;\mathbb{Z})/Tor$, such that $\|\alpha\| = \langle \alpha, x \rangle$ for any $\alpha \in C$. We define two oriented closed orbits c_1 and c_2 to be drilling equivalent if $[c_1] + x$ is linear dependant with $[c_2] + x$ in $H_1(N;\mathbb{Z})/Tor$. Then we have the following Drilling Theorem.

Theorem 8.2.2. *(Drilling Theorem) For all but finitely many drilling equivalence classes of closed orbits, the drilling construction gives irrational minimal point.*

There is also an analogous construction by using cyclic branched cover along closed orbits and a similar theorem (Theorem 12.1.4). However, due to some technical reason, the statement there is not as neat as in Theorem 8.2.2.

In Lemma 12.1.5, we will show that, for any pseudo-Anosov map (S, ϕ), the mapping torus $M(S, \phi)$ has infinitely many different drilling classes and also infinitely many branched covering classes satisfying the technical condition in Theorem 12.1.4. So we have irrational minimal point examples for both closed surfaces and surfaces with boundary.

In Section 12.2.1 and 12.2.2, we will study some simple drilling classes and branched covering classes for an explicit example. An alternative method of proving irrationality of $A(S, \phi)$ will be developed there. This method uses the algebraic number theory and a numerical computation.

Second Construction. We will give the second construction in Section 12.2.3, which is given by Penner's construction [37]. Recall that, in Proposition 11.2.1, we will show that there are some special elements in $\phi \in \mathcal{D}(a^+, b^-)$ which have their Teichmüller polynomials with algebraic symmetric. In Section 12.2.3, we will give an explicit element in $\mathcal{D}(a^+, b^-)$ which does not satisfy the conditions in Proposition 11.2.1. Then we can use the numerical method in Section 12.2.2 to show that $A(S, \phi) \neq \mathbb{Q}$ in this case.

Being an invariant of a fibered cone C, A_C is actually not an invariant of 3-manifolds. In Section 12.3.2, we will give an example obtained by Dehn-filling of the magic-manifold to show this phenomenon. The filled manifold has six fibered faces, one pair of them have $A_C = \mathbb{Q}$, while the other two pairs have $A_C \neq \mathbb{Q}$.

Chapter 9

McMullen's work on the Teichmüller Polynomial

In this chapter, we give a quick review of McMullen's work on the Teichmüller Polynomial. All the material in this chapter can be found in [32].

Given a hyperbolic surface bundle N, let $F \subset H^1(N;\mathbb{R})$ be an open fibered face, McMullen defined a polynomial invariant Θ_F which is called the Teichmüller polynomial of F. The Teichmüller polynomial $\Theta_F = \sum_g a_g \cdot g$ lies in the group ring $\mathbb{Z}[G]$, here $G = H_1(N;\mathbb{Z})/Tor$.

For a fibered face $F \subset H^1(N;\mathbb{R})$, it is associated with a suspended lamination $\mathcal{L} \subset M$, which is the suspension of the invariant stable lamination on the fiber surface, for some surface bundle structure lying in $C = \mathbb{R}^+ \cdot F$. Moreover, $\mathcal{L}$ is universal for this fibered face F, i.e. it does not depend on which surface bundle structure we choose.

Let $p : \hat{N} \to N$ be the maximal free abelian cover with the deck transformation group $G \cong H_1(N;\mathbb{Z})/Tor$, and let $\hat{\mathcal{L}} = p^{-1}(\mathcal{L})$.

The module of the lamination $T(\hat{\mathcal{L}})$ is defined in Section 2 of [32]. $T(\hat{\mathcal{L}})$ is a $\mathbb{Z}$-module generated by transversals $[T]$ of $\hat{\mathcal{L}}$ modulo the following equivalent relations:

- $[T] = [T'] + [T'']$ if T is the disjoint union of T' and T'',
- $[T] = [T']$ if T is isotopic to T' through transversals, with their end points have the same type of intersection with $\hat{\mathcal{L}}$.

Since $\hat{\mathcal{L}}$ admits a G-action by deck transformation, $T[\hat{\mathcal{L}}]$ is a $\mathbb{Z}[G]$-module. Then Θ_F is defined to be the Alexander polynomial of $T[\hat{\mathcal{L}}]$ as a $\mathbb{Z}[G]$-module.

Θ_F has a few nice properties and we will list some of them in this chapter.

At first, Θ_F can be computed effectively if one knows the monodromy ϕ on some fiber surface S with $[S] \in C$. Let $\tau \subset S$ be the invariant train track of ϕ carrying the stable lamination with the switch set V and branch set E. Let $\hat{S}$ be one component of $p^{-1}(S)$ in the maximal abelian cover and $\hat{\tau} \subset \hat{S}$ be the component of $p^{-1}(\tau)$ lying in $\hat{S}$. $H_1(M;\mathbb{Z})/Tor$ is decomposed as $\mathbb{Z}[u] \oplus T$, with $u \cap [S] = 1$ and $t \cap [S] = 0$ for any $t \in T$. We will always fix such a decompostion of $H_1(N;\mathbb{Z})/Tor$ in the following. There is a natural T action on $\hat{\tau}$, so the $\mathbb{Z}$-module of branches of $\hat{\tau}$ can be identified with $\mathbb{Z}[T]^E$, and the $\mathbb{Z}$-module of switches is identified with $\mathbb{Z}[T]^V$. Given a T-invariant collapsing $\hat{\phi}(\hat{\tau}) \to \hat{\tau}$, we have a $\mathbb{Z}[T]$-module map $P_E : \mathbb{Z}[T]^E \to \mathbb{Z}[T]^E$ with matrix $P_E(t)$, and also a $\mathbb{Z}[T]$-module map $P_V : \mathbb{Z}[T]^V \to \mathbb{Z}[T]^V$ on switches, with matrix $P_V(t)$. Then McMullen showed the following formula of the Teichmüller polynomial.

Theorem 9.0.3. *([32] Theorem 3.6) The Teichmüller polynomial of the fibered face F is given by:*

$$\Theta_F(t,u) = \frac{det(uI - P_E(t))}{det(uI - P_V(t))}$$

when $b_1(M) > 1$.

The Teichmüller polynomial Θ_F also has a nice symmetric property as the Alexander polynomial.

Theorem 9.0.4. *([32] Corollary 4.3) The Teichmüller polynomial is symmetric, i.e.*

$$\Theta_F = \sum_g a_g \cdot g = \pm h \sum_g a_g \cdot g^{-1}$$

for some unit $h \in \mathbb{Z}[G]$.

In our application, the most important property of the Teichmüller polynomial we will use is that, Θ_F can compute the dilatation function $\lambda(\cdot)$ effectively.

Theorem 9.0.5. *([32] Theorem 5.1) The dilatation function* $\lambda(\cdot)$ *satisfies*

$$\lambda(\alpha) = sup\{k > 1 |\ 0 = \Theta_F(k^\alpha) = \sum_g a_g \cdot k^{\langle \alpha, g \rangle}\}$$

for any $\alpha \in C$.

Remark 9.0.6. *Actually, what MuMullen showed is* $\lambda(\alpha) = sup\{|k| \mid 0 = \Theta_F(k^\alpha)\}$. *Since the supremum is assumed by a positive real number by the Perron-Frobenius theory, we can state the Theorem as above.*

McMullen also defined the Teichmüller norm (with respect to the fibered face F) on $H^1(N;\mathbb{R})$. For any $\alpha \in H^1(N;\mathbb{R})$, the Teichmüller norm is defined by $\|\alpha\|_{\Theta_F} = \sup_{a_g \neq 0 \neq a_h} \langle \alpha, g - h \rangle$. Then he proved that the Teichmüller norm $\| \cdot \|_{\Theta_F}$ determines the fibered cone C.

Theorem 9.0.7. *([32] Theorem 6.1) For any fibered face* F *of the Thurston norm unit ball, there exists a face* D *of the Teichmüller norm unit ball, such that* $\mathbb{R}_+ \cdot F = \mathbb{R}_+ \cdot D$.

By the formula in Theorem 9.0.3, we can see that $\Theta_F(u,t)$ has a leading term u^d with coefficient 1, i.e. $\Theta_F(u,t) = u^d + b_1(t)u^{d-1} + \cdots + b_d(t)$. Then Theorem A.1 (C) of [32] implies the following immediate corollary:

Corollary 9.0.8. *For any* $\alpha \in C$, $\langle \alpha, d \cdot u \rangle > \langle \alpha, g \rangle$ *for any* g *other than* u^d *appearing in* Θ_F, *thus* $\sum_g a_g \cdot X^{\langle \alpha, g \rangle}$ *has a unique leading term* $X^{\langle \alpha, d \cdot u \rangle}$ *with coefficient* 1.

Chapter 10

Properties of the invariant $A(S, \phi)$

Given a hyperbolic surface bundle $N = M(S, \phi)$, let C be the fibered cone containing $[S]$, and denote the corresponding fibered face by F. Let m_F be the minimal point of the restriction of $\lambda(\cdot)$ on the fibered face F. After choosing a basis $\{\alpha_i\}_{i=1}^b$ of $H^1(N; \mathbb{Z})$, we have $m_F = \sum_{i=1}^b r_i \alpha_i$. Then we define our invariant to be

$$A_C = A(S, \phi) = \{\sum_{i=1}^{b} q_i r_i \mid q_i \in \mathbb{Q}\}.$$

Since there exists an $x \in H_1(N; \mathbb{Z})/Tor$ *dual* to the fibered face F, i.e. $\|\alpha\| = \langle \alpha, x \rangle$ for any $\alpha \in C$, and $1 = \|m_F\| = \langle m_F, x \rangle$, $\mathbb{Q} \subset A(S, \phi)$ always holds.

Before giving examples with $A(S, \phi) \neq \mathbb{Q}$, let us first investigate a few nice properties of $A(S, \phi)$ in this chapter.

10.1 A covering property of $A(S, \phi)$

Let $p : N' \to N$ be a finite cover, then $p^*([S])$ gives a surface bundle structure on N'. Let the fibered cone containing $[S]$ and $p^*([S])$ be C and C', and the corresponding fibered face be F and F' respectively. Let S' be one component of $p^{-1}(S)$, and ϕ' be the corresponding monodromy. Then we have the following proposition.

Proposition 10.1.1. $A(S,\phi) = A(S',\phi')$

We begin with showing the proposition for regular covers.

Lemma 10.1.2. *Suppose $p : N' \to N$ is a regular cover, then $A(S,\phi) = A(S',\phi')$.*

Proof. Let H be the deck transformation group of the regular cover $p : N' \to N$. Then $p^*(H^1(N;\mathbb{R}))$ is the fixed point set of the H-action on $H^1(N';\mathbb{R})$, i.e. $p^*(H^1(N;\mathbb{R})) = (H^1(N';\mathbb{R}))^H$.

In [15], Gabai showed that for any $\alpha \in H^1(N;\mathbb{R})$, $\|p^*(\alpha)\| = \deg p \cdot \|\alpha\|$. So $\frac{1}{\deg p}p^*(F) \subset F'$. Actually $\frac{1}{\deg p}p^*(F) \subset (F')^H$ (the fixed point set of the H-action on F'), since $p^*(H^1(N;\mathbb{R})) = (H^1(N';\mathbb{R}))^H$.

Claim. $\frac{1}{\deg p}p^*(F) = (F')^H$.

Let $x' \in H_1(N';\mathbb{Z})/Tor$ be the homology class dual with C', i.e. $\|\alpha'\| = \langle \alpha', x' \rangle$ for any $\alpha' \in C'$. Then $\frac{1}{\deg p}p_*(x')$ is dual to C, since $\|\alpha\| = \frac{1}{\deg p}\|p^*(\alpha)\| = \frac{\langle p^*(\alpha), x' \rangle}{\deg p} = \frac{\langle \alpha, p_*(x') \rangle}{\deg p}$ for any $\alpha \in C$. For any $\beta' \in (F')^H$, let $\beta' = p^*(\beta)$. Then $\|\beta\| = \frac{1}{\deg p}\|p^*(\beta)\| = \frac{1}{\deg p}\langle p^*(\beta), x' \rangle = \langle \beta, \frac{1}{\deg p}p_*(x') \rangle$. So $\beta \in C$, thus $\beta' \in p^*(C)$. Since $\|\beta'\| = 1$, $\beta' \in \frac{1}{\deg p}p^*(F)$ holds immediately.

Since the dilatation function $\lambda(\cdot)$ is invariant under the H-action, i.e. $\lambda(\alpha') = \lambda(h^*(\alpha'))$ for $\alpha' \in C'$, the minimal point $m'_F \in (F')^H$. So it suffices to find the minimal point of the restriction of $\lambda(\cdot)$ on $(F')^H = \frac{1}{\deg p}p^*(F)$.

On the other hand, since $\lambda(p^*(\alpha)) = \lambda(\alpha)$ holds for any integer class $\alpha \in C$, this equality holds for any $\alpha \in C$. So $\frac{1}{\deg p}p^*(m_F)$ is the minimal point of the restriction of $\lambda(\cdot)$ on $\frac{1}{\deg p}p^*(F)$, i.e. $\frac{1}{\deg p}p^*(m_F) = m'_F$.

Since p^* is represented by a matrix with integer entries under any integer basis of $H^1(N;\mathbb{Z})$ and $H^1(N';\mathbb{Z})$, the coordinates of m_F and m'_F give the same $\mathbb{Q}$-module, i.e. $A(S,\phi) = A(S',\phi')$. □

Now we are ready to prove Proposition 10.1.1.

Proof. We can take a further finite cover $p' : N'' \to N'$ such that $p'' : N'' \to N$ is a regular cover. Let C'', F'' and m''_F be the corresponding fibered cone, fibered face of N'' and the minimal point on F''.

By Lemma 10.1.2, we have $m''_F = \frac{1}{\deg p''} p''^*(m_F)$. Since

$$m''_F = \frac{1}{\deg p''} p''^*(m_F) = \frac{1}{\deg p'} p'^*(\frac{1}{\deg p} p^*(m_F))$$

and $\frac{1}{\deg p'} p'^*(F') \subset F''$, $\frac{1}{\deg p} p^*(m_F)$ is the minimal point on the fibered face F', i.e. $m'_F = \frac{1}{\deg p} p^*(m_F)$. So $A(S, \phi) = A(S', \phi')$. □

Comparing with definitions of the commensurability in [8], we give the following definition.

Definition 10.1.3. *Two maps (S_1, ϕ_1) and (S_2, ϕ_2) are said to be fibered cone commensurable if there is a 3-manifold M, with finite covers $p_i : M \to M(S_i, \phi_i)$, $i = 1, 2$, such that $p_1^*([S_1])$ and $p_2^*([S_2])$ lie in the same fibered cone of $H^1(M; \mathbb{R})$.*

Then we have the following immediate Corollary of Proposition 10.1.1.

Corollary 10.1.4. *If two pseudo-Anosov maps (S_1, ϕ_1) and (S_2, ϕ_2) are fibered cone commensurable, then $A(S_1, \phi_1) = A(S_2, \phi_2)$.*

10.2 Symmetry implies rationality

By using the symmetry given by group actions, we can deduce that $A(S, \phi) = \mathbb{Q}$ in a few simple cases.

Proposition 10.2.1. *Suppose ϕ is a pseudo-Anosov map on a surface S, and ϕ commutes with an involution τ with $\tau_* = -id$ on $H_1(S; \mathbb{Z})$. Then $A(S, \phi) = \mathbb{Q}$.*

Proof. On the mapping torus $N = M(S, \phi) = S \times I/(x, 0) \sim (\phi(x), 1)$, we can define an involution $\bar{\tau}$ on N by $\bar{\tau}(x, t) = (\tau(x), t)$. Here $\bar{\tau}$ is well-define since ϕ commutes with τ.

Let $\pi : N \to S^1$ be the map which gives the surface bundle structure of $M(S,\phi)$ with fiber surface S. Let $(t_1, t_2, \cdots, t_k, u)$ be a basis of $H_1(N;\mathbb{Z})/Tor$, such that $\pi_*(t_i) = 0$, then $\bar{\tau}_*(t_i) = -t_i$. We can choose u such that $\bar{\tau}_*(u) = u$. Let $(\alpha_1, \cdots, \alpha_k, [S])$ be the dual basis of $H^1(N;\mathbb{Z})$, then $\bar{\tau}^*(\alpha_i) = -\alpha_i$, and $\bar{\tau}^*([S]) = [S]$.

Let C be the fibered cone containing $[S]$, and F be the corresponding fibered face. Since $\frac{[S]}{\|[S]\|}$ is the unique fixed point of the $\bar{\tau}^*$ action on F, and $\|\frac{[S]}{\|[S]\|}\| = 1$, we have $m_F = \frac{[S]}{\|[S]\|}$, which is a rational class. So $A(S,\phi) = \mathbb{Q}$. □

Pseudo-Anosov maps which commute with the hyperelliptic involution on a closed surface are closely related with pseudo-Anosov braids, which are specialized interesting. So we point out the following immediately corollary.

Corollary 10.2.2. *For any pseudo-Anosov map ϕ on a closed surface S which commutes with the hyperelliptic involution τ, we have $A(S,\phi) = \mathbb{Q}$.*

Corollary 10.2.3. *For any pseudo-Anosov map ϕ on surface $S = \Sigma_{2,0}$ or $\Sigma_{1,2}$ or $\Sigma_{0,4}$, $A(S,\phi) = \mathbb{Q}$.*

Proof. By Proposition 10.1.1, $A(S,\phi)$ is invariant by taking powers of ϕ, so we can assume that ϕ lies in the pure mapping class group, i.e. the set of mapping classes which send each boundary component of the surface to itself.

By Section 4.4.4 of [12], the pure mapping class groups of $\Sigma_{2,0}, \Sigma_{1,2}$ are generated by Dehn twists along simple closed curves $\gamma_1,\ \gamma_2,\ \gamma_3$ in Figure 12 (a), (b) respectively. It is also well known that the pure mapping class group of $\Sigma_{0,4}$ is generated by twists along simple closed curves $\gamma_1,\ \gamma_2$ in Figure 12 (c).

It is easy to see that the involutions τ (π-rotation) in Figure 12 (a), (b) commute with the whole pure mapping class groups of $\Sigma_{2,0}$ and $\Sigma_{1,2}$, while $\tau_* = -id$ on $H_1(S;\mathbb{R})$. So Proposition 10.2.1 implies that $A(S,\phi) = \mathbb{Q}$.

Although $\Sigma_{0,4}$ does not admit an involution with $\tau_* = -id$, it admits two involutions τ_1 and τ_2, and both of them commute with the pure mapping class group (see

Figure 12 (c)). These two involutions give a $\mathbb{Z}_2 \oplus \mathbb{Z}_2$-action on $N = M(S, \phi)$, thus an action on the fibered face F. The minimal point m_F is the unique fixed point of this $\mathbb{Z}_2 \oplus \mathbb{Z}_2$ action on F. So $A(S, \phi) = \mathbb{Q}$.

□

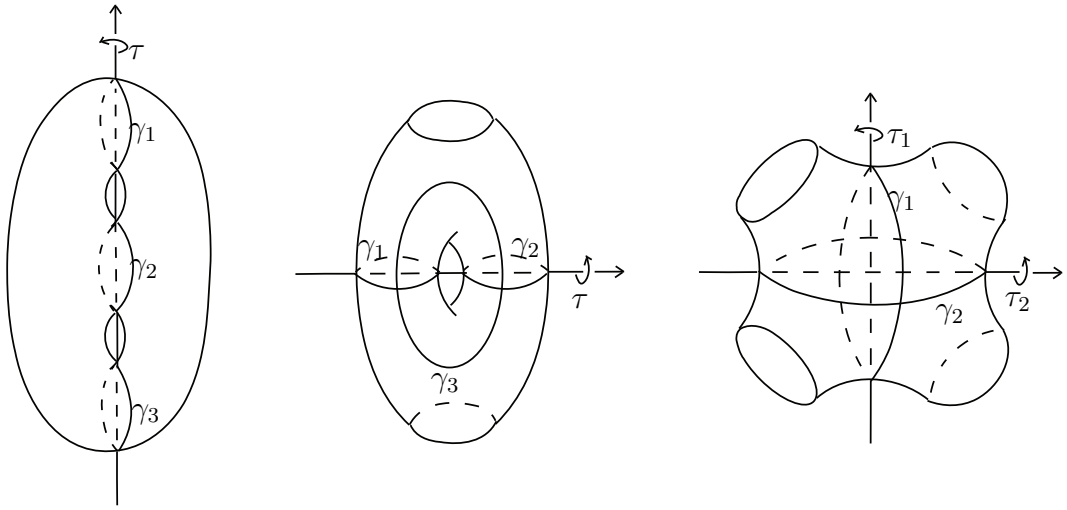

Figure 12

A quick but interesting corollary of Corollary 10.1.4 and Corollary 10.2.3 is the following:

Corollary 10.2.4. *For a closed surface S, if $A(S, \phi) \neq \mathbb{Q}$, the following statements hold.*

(a) (S, ϕ) is not fibered cone commensurable with any pseudo-Anosov map on $\Sigma_{2,0}$.

(b) For any pseudo-Anosov map (S', ϕ') with $b_1(M(S', \phi')) = 1$, (S, ϕ) is not fibered cone commensurable with (S', ϕ').

10.3 Irrationality implies transcendentality

The following theorem in number theory is an equivalent formulation of the Hilbert's Seventh Problem, which explains why logarithm function is called a *transcendental function.*

Theorem 10.3.1. *([13] Theorem 3.2) Let α, β, γ be algebraic numbers, with $\alpha\beta \ln \beta \neq 0$, and $\gamma = \frac{\ln \alpha}{\ln \beta}$, then $\gamma \in \mathbb{Q}$.*

The following theorem implies that all the irrational elements of $A(S, \phi)$ are transcendental.

Proposition 10.3.2. *Suppose that $A(S, \phi) \neq \mathbb{Q}$, then for any $\omega \in A(S, \phi) \setminus \mathbb{Q}$, ω is a transcendental number.*

Proof. Take a basis $(\alpha_1, \cdots, \alpha_b)$ of $H^1(N; \mathbb{Z})$, and its dual basis $(x_1, \cdots, x_b)$ of $H_1(N; \mathbb{Z})/Tor$ (here $b = b_1(M)$). We also take a basis $(v_1, \cdots, v_{b-1})$ of the tangent space $T_{m_F}F$. Let the Teichmüller polynomial $\Theta_F = \sum_g a_g \cdot g$, and let each g be expressed as $g = \sum_{i=1}^b g_i x_i$ with $g_i \in \mathbb{Z}$.

Let $m_F = \sum_{i=1}^b r_i \alpha_i$ be the minimal point of the restriction of $\lambda(\cdot)$ on the fibered face F. Since $\|m_F\| = 1$, for $x = \sum_{i=1}^b m_i x_i \in H_1(N; \mathbb{Z})/Tor$ dual to fibered face F, we have $\|m_F\| = \langle m_F, x \rangle = \sum_{i=1}^b r_i \cdot m_i = 1$, where $m_i \in \mathbb{Z}$.

Let $\lambda_0 = \lambda(m_F)$. Then by Theorem 9.0.5,

$$0 = \sum_g a_g \lambda_0^{\langle m_F, g \rangle} = \sum_g (a_g \prod_{i=1}^b (\lambda_0^{r_i})^{g_i}).$$

Since m_F is the minimal point, by taking derivative along the direction of $v_i, i = 1, \cdots, b-1$, we get

$$0 = \sum_g a_g \langle v_i, g \rangle \lambda_0^{\langle m_F, g \rangle} = \sum_g (a_g \langle v_i, g \rangle \prod_{i=1}^b (\lambda_0^{r_i})^{g_i}), \ i = 1, \cdots, b-1.$$

So $(\lambda_0^{r_1}, \cdots, \lambda_0^{r_b})$ is a solution of the following polynomial equation

$$\begin{cases} \sum_g a_g X_1^{g_1} \cdots X_b^{g_b} = 0, \\ \sum_g a_g \langle v_1, g \rangle X_1^{g_1} \cdots X_b^{g_b} = 0, \\ \cdots \\ \sum_g a_g \langle v_{b-1}, g \rangle X_1^{g_1} \cdots X_b^{g_b} = 0. \end{cases}$$

Since the minimal point m_F is unique, these equations are independent, and one of the solution is $(\lambda_0^{r_1}, \cdots, \lambda_0^{r_b})$. Solve the equation by eliminating free variables inductively, we know that $\lambda_0^{r_1}, \cdots, \lambda_0^{r_b}$ are all algebraic numbers. For any $r \in A(S, \phi)$, let $r = \sum_{i=1}^b q_i \cdot r_i$ with $q_i \in \mathbb{Q}$, then

$$r = \frac{\ln(\prod_{i=1}^b (\lambda_0^{r_i})^{q_i})}{\ln \lambda_0} = \frac{\ln(\prod_{i=1}^b (\lambda_0^{r_i})^{q_i})}{\ln(\prod_{i=1}^b (\lambda_0^{r_i})^{m_i})}.$$

Since $\lambda_0 = \lambda(m_F)$ is a positive real number, $\lambda_0^{r_i}$ are all positive real algebraic numbers, and $\ln \lambda_0 > 0$. For $q_i, m_i \in \mathbb{Q}$, $\prod_{i=1}^b (\lambda_0^{n_i})^{q_i}$ and $\prod_{i=1}^b (\lambda_0^{n_i})^{m_i}$ are both positive real algebraic numbers. So by Theorem 10.3.1, r is either a rational number of a transcendental number. □

Given Proposition 10.3.2, it makes sense that we call $A(S, \phi)$ a *transcendental invariant* of pseudo-Anosov maps.

Chapter 11

Penner's construction and rational minimal points

In this chapter, we will study pseudo-Anosov maps given by Penner's construction ([37]), and show that some special pseudo-Anosov maps given by Penner's construction have rational minimal points. The rationality is deduced by the algebraic symmetry on the corresponding Teichmüller polynomial.

11.1 Penner's construction and a computation of the dilatation function

Let T_c be the left hand Dehn-twist about a simple closed curve $c \subset S$. By using Dehn-twists, Penner gave a construction of pseudo-Anosov maps in [37].

Theorem 11.1.1. *([37]) Suppose $\{a_i\}_{i=1}^m$ and $\{b_j\}_{j=1}^n$ are two families of disjoint essential simple closed curves on a surface S, such that $\{a_i\}_{i=1}^m$ intersect $\{b_j\}_{j=1}^n$ essentially and each component of $S \setminus ((\cup a_i) \cup (\cup b_j))$ is a disk or an anuulus containing a boundary component of S. Let $\mathcal{D}(a^+, b^-)$ be the semigroup generated by T_{a_i} and $T_{b_j}^{-1}$. If each of T_{a_i} and $T_{b_j}^{-1}$ appear in the presentation of some $\phi \in \mathcal{D}(a^+, b^-)$ at*

least once, then ϕ is a pseudo-Anosov map. Moreover, an invariant bigon track can be constructed explicitly, by locally deforming the union of $\{a_i\}_{i=1}^m$ and $\{b_j\}_{j=1}^n$ near their intersection points.

Now we fix a pseudo-Anosov element $\phi \in \mathcal{D}(a^+, b^-)$ satisfying Theorem 11.1.1. Since the induced map of T_c on the homology is given by $(T_c)_*(x) = x + (x \cdot c)c$, we have $\phi_*(x) - x \in span(a_1, \cdots, a_m, b_1, \cdots, b_n)$. So $i_*(H_1(S, \mathbb{R})) \subset H_1(M(S, \phi); \mathbb{R})$ has a natural quotient $H_1(S, \mathbb{R})/span(a_1, \cdots, a_m, b_1, \cdots, b_n)$.

Definition 11.1.2. *Let ϕ be a pseudo-Anosov element in $\mathcal{D}(a^+, b^-)$, ϕ is called a generic element in $\mathcal{D}(a^+, b^-)$ if $i_*(H_1(S, \mathbb{R})) = H_1(S, \mathbb{R})/span(a_1, \cdots, a_m, b_1, \cdots, b_n)$, i.e. the quotient in the previous paragraph is trivial.*

For a generic ϕ, we can read the homology of $H_1(M(S, \phi); \mathbb{R})$ directly from the twisting curves a_i, b_j, but do not need to know more information about ϕ.

Given a generic element $\phi \in \mathcal{D}(a^+, b^-)$, we will define another polynomial Φ which can also compute the dilatation function $\lambda(\cdot)$ effectively. Moreover, Φ can be computed directly from the two families of curves $\{a_i\}_{i=1}^m, \{b_j\}_{j=1}^n$ and the presentation of ϕ, and we do not need to construct the invariant train track of ϕ.

In Theorem 3.1 of [37], Penner constructed an invariant bigon-track τ of any pseudo-Anosov element $\phi \in \mathcal{D}(a^+, b^-)$, by locally deforming the union of $\{a_i\}_{i=1}^m$ and $\{b_j\}_{j=1}^n$ near their intersection points. Actually, τ only depends on the two families of curves $\{a_i\}_{i=1}^m$, $\{b_j\}_{j=1}^n$, but does not depend on the specific element $\phi \in \mathcal{D}(a^+, b^-)$.

For each bigon region B_k in $S \setminus \tau$, we choose a point $p_k \in B_k$, and let $S' = S \setminus \{p_1, \cdots, p_k\}$ with the natural inclusion $i : S' \to S$. Let $\{a_i'\}_{i=1}^m = \{i^{-1}(a_i)\}_{i=1}^m, \{b_j'\}_{j=1}^n = \{i^{-1}(b_j)\}_{j=1}^n$ be the corrsponding two families of disjoint simple closed curves on S'. Then $\{a_i'\}_{i=1}^m, \{b_j'\}_{j=1}^n$ still satisfy the assumption of Theorem 11.1.1. Let $\phi' \in \mathcal{D}(a'^+, b'^-)$ be the mapping class of S' corresponding with $\phi \in \mathcal{D}(a^+, b^-)$, then we have $i \circ \phi' = \phi \circ i$, while ϕ' is also a pseudo-Anosov map.

Lemma 11.1.3. *Let $N = M(S, \phi)$ and $N' = M(S', \phi')$ be the two mapping tori with the natural inclusion $i' : N' \to N$. Let $C \subset H^1(N; \mathbb{R})$ be the fibered cone containing the dual of $[S]$. Then for any $\alpha \in C$, we have $\lambda(i^*(\alpha)) = \lambda(\alpha)$. Moreover, the homology class dual to the fibered cone F is $|\chi(S)|u$ for some $u \in H_1(N; \mathbb{Z})/Tor$ and $u \cap [S] = 1$.*

Proof. From $\{a'_i\}_{i=1}^m, \{b'_j\}_{j=1}^n$, by using Penner's method, we can construct an invariant bigon track $\tau' = i^{-1}(\tau)$. τ' is actually a train track since we have added a puncture on each bigon component of $S \setminus \tau$. A pair of transverse ϕ'-invariant singular foliation $(\mathcal{F}'^+, \mathcal{F}'^-)$ on S' can be constructed as in [37]. We first construct ϕ'-invariant horizontal and vertical foliations on $N(\tau')$ (a neighborhood of τ'). Then collapse the disc and annulus regions of $S' \setminus N(\tau')$ to get singular foliations $(\mathcal{F}'^+, \mathcal{F}'^-)$ on S'. Since the regions of $S' \setminus \tau'$ corresponding with bigon regions $B_k \subset S$ are $B_k - \{p_k\}$, the picture of $(\mathcal{F}'^+, \mathcal{F}'^-)$ near the puncture is as shown Figure 13. To make the picture clearer, we draw a boundary component but not a puncture in the picture.

Since $(\mathcal{F}'^+, \mathcal{F}'^-)$ give a 2-prong picture near the puncture p_k as in Figure 13, $(\mathcal{F}'^+, \mathcal{F}'^-)$ induce a pair of transverse ϕ-invariant singular foliations $(\mathcal{F}^+, \mathcal{F}^-)$ on S. ϕ preserves this pair of singular foliations $(\mathcal{F}^+, \mathcal{F}^-)$, and each p_k is a fixed point of the pseudo-Anosov map ϕ on S. Let $s_1, \cdots, s_t$ be the singular points of transverse singular foliations $(\mathcal{F}^+, \mathcal{F}^-)$ on S. By the construction of $(\mathcal{F}'^+, \mathcal{F}'^-)$, all these s_i are fixed points of ϕ.

Now we turn to 3-manifolds $N = M(S, \phi)$ and $N' = M(S', \phi')$. Since all the points p_k are all fixed points of ϕ, let c_k be the closed orbit passing through p_k, then N' is obtained from N by drilling closed orbits $c_1, \cdots, c_l$ of the suspension flow. So $\lambda(i^*(\alpha)) = \lambda(\alpha)$ for any $\alpha \in C$.

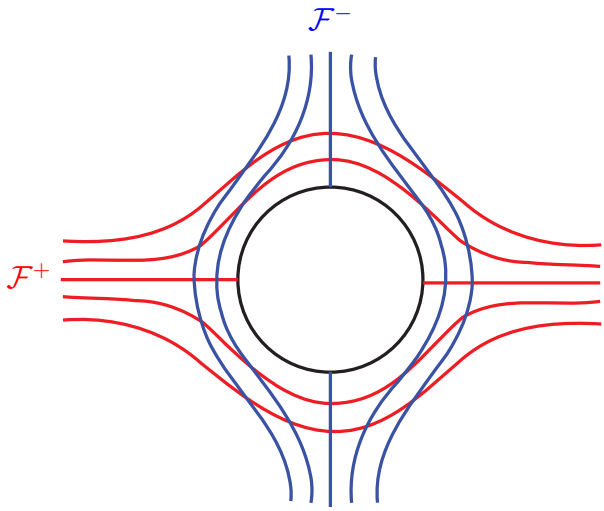

Figure 13

Let $c'_1, \cdots, c'_t$ be the oriented closed orbit passing through $s_1, \cdots, s_t$ respectively with $c'_i \cap S = 1$. We will show that all the closed orbits $c'_1, \cdots, c'_t$ share the same homology class in $H_1(N;\mathbb{Z})/Tor$. For any two points in $x, y \in \{s_1, \cdots, s_t\}$, choose an arbitrary arc γ from x to y, then the corresponding closed orbit c'_x and c'_y satisfies $\gamma \cdot c'_y \cdot \phi(\bar{\gamma}) \cdot \bar{c'_x} = 0$ in $\pi_1(N)$. So $[c'_x] - [c'_y] = [\gamma \cdot \phi(\bar{\gamma})] \in H_1(N;\mathbb{Z})$. Since ϕ is composition of Dehn twists along α and β curves, $[\gamma \cdot \phi(\bar{\gamma})] \in span(a_1, \cdots, a_m, b_1, \cdots, b_n) \subset H_1(N;\mathbb{R})$. Since ϕ is generic, $span(a_1, \cdots, a_m, b_1, \cdots, b_n) = \{0\}$ in $H_1(N;\mathbb{R})$, so $[c'_x] - [c'_y] = [\gamma \cdot \phi(\bar{\gamma})] = 0 \in H_1(N;\mathbb{R})$, thus $[c'_x] = [c'_y]$. So we can take $u \in H_1(N;\mathbb{Z})/Tor$, such that $[c'_1] = \cdots = [c'_t] = u$.

Any singular point s_i gives a d_i-prong singularity of the transverse singular foliations $(\mathcal{F}^+, \mathcal{F}^-)$ with $d_i > 2$. By the Poincare-Hopf Theorem, $\|\alpha\| = \langle \alpha, \sum_{i=1}^t \frac{d_i - 2}{2} u \rangle$ holds for all integer classes $\alpha \in C$, so it holds for any $\alpha \in C$. Since $\|[S]\| = |\chi(S)| = (|\chi(S)|u) \cap [S]$, the dual of the fibered face F is $\sum_{i=1}^t \frac{d_i - 2}{2} u = |\chi(S)|u$. □

Decompose $H_1(N;\mathbb{Z})/Tor = \mathbb{Z}[u] \oplus T$ as usual, with T being the image of $H_1(S;\mathbb{Z})$. Let $\hat{p} : \hat{N} \to N$ be the maximal free abelian cover of N, $\hat{S}$ be one component of $\hat{p}^{-1}(S)$, and $\hat{\tau} \subset \hat{S}$ be one component of $\hat{p}^{-1}(\tau)$. Then we have a T-action on $\hat{\tau}$, so branches

and switches of $\hat{\tau}$ give us $\mathbb{Z}[T]$-modules $\mathbb{Z}[T]^E$ and $\mathbb{Z}[T]^V$. Since $\hat{\phi}(\hat{\tau})$ is carried by $\hat{\tau}$, we have an $\hat{\phi}$ action on these two modules with matrices $P_E(t)$ and $P_V(t)$ respectively.

Definition 11.1.4. *We define a polynomial* Φ *by:*

$$\Phi = \frac{det(uI - P_E(t))}{det(uI - P_V(t))} = \sum_g a_g \cdot g.$$

Remark 11.1.5. *Here* τ *is only a bigon track but may not be a train track, so* Φ *may not be equal to* Θ_F*.*

Proposition 11.1.6. *For any* $\alpha \in C$*, we have*

$$\lambda(\alpha) = \sup\{k > 1 |\ 0 = \Phi_F(k^\alpha) = \sum_g a_g \cdot k^{\langle \alpha, g \rangle}\}.$$

Proof. Let N' be as in the proof of Lemma 11.1.3, and let $H_1(N';\mathbb{Z})/Tor = \mathbb{Z}[u] \oplus T'$ with T' corresponds with the image of $H_1(S';\mathbb{Z})$. Then we have an exact sequence $0 \to K \to H_1(N';\mathbb{Z})/Tor \to H_1(N;\mathbb{Z})/Tor \to 0$ with $K \subset T'$.

Let $\Theta_{F'}$ be the Teichmüller polynomial associated with the fibered cone $C' \subset H^1(N';\mathbb{R})$ containing $[S']$. Since $\tau' \subset S'$ is an invariant train track of ϕ', we can use τ' to compute $\Theta_{F'}$. Let $\widetilde{p}' : \widetilde{N}' \to N'$ be the maximal free abelian cover of N', $\widetilde{S}'$ be one component of $\widetilde{p}'^{-1}(S')$ and $\widetilde{\tau}' = \widetilde{p}'^{-1}(\tau) \cap \widetilde{S}'$. Then by Theorem 9.0.3, we have

$$\Theta_{F'} = \frac{det(uI - P_{E'}(t'))}{det(uI - P_{V'}(t'))}.$$

Here $P_{E'}(t')$ and $P_{V'}(t')$ are the induced map of $\widetilde{\phi}' : \widetilde{S}' \to \widetilde{S}'$ on the $\mathbb{Z}[T']$-modules of branches and switches of $\widetilde{\tau}'$.

Since Lemma 11.1.6 implies that $\lambda(i^*(\alpha)) = \lambda(\alpha)$, to compute $\lambda(\alpha)$ for some $\alpha \in C$, we do not need to use the full power of $\Theta_{F'}$, but only need to valuate $\Theta_{F'}$ on $i^*(H^1(N;\mathbb{R}))$. Let $\Theta_{F'} = \sum_g a_g \cdot g$, with $g \in H_1(N';\mathbb{Z})/Tor$, then for any $i^*(\alpha) \in C'$,

by Theorem 9.0.5, we have that $\lambda(i^*(\alpha))$ is the greatest root of

$$0 = \Theta_{F'}(X^{i^*(\alpha)}) = \sum_g a_g \cdot X^{\langle i^*(\alpha), g\rangle} = \sum_g a_g \cdot X^{\langle \alpha, i_*(g)\rangle}.$$

So for computing the dilatation function $\lambda(\cdot)$ on C, we need only to compute $P_{E'}(t')$ and $P_{V'}(t')$ modulo K.

Let $\hat{p} : \hat{N}' \to N'$ be the free abelian cover given by $\pi_1(N') \to H_1(N';\mathbb{Z})/Tor \to H_1(N;\mathbb{Z})/Tor$. Then there exists a natural inclusion $\hat{i} : \hat{N}' \to \hat{N}$ to the maximal free abelian cover of N. $\hat{N}'$ is an intermediate cover of $\widetilde{p}' : \widetilde{N}' \to N'$, while the deck transformation group of $p' : \widetilde{N}' \to \hat{N}'$ is K. Let $\hat{S}' = p(\widetilde{S}')$, $\hat{\tau}' = p(\widetilde{\tau}')$ and $\hat{\phi}' : \hat{S}' \to \hat{S}'$ be a lift of ϕ'. Then we have $P_{E'}(t') = \hat{P}'_E(t')$ and $P_{V'}(t') = \hat{P}'_V(t')$ modulo K, here $\hat{P}'_E(t')$ and $\hat{P}'_V(t')$ are the matrices of $\hat{\phi}'$ action on the $\mathbb{Z}[T]$-modules of branches and switches of $\hat{\tau}'$.

Since $\hat{\tau}'$ is isomorphic with $\hat{\tau}$ with the T- and ϕ- action, we have $\hat{P}'_E(t') = P_E(t)$ and $\hat{P}'_V(t') = P_V(t)$. So we have $\Theta_{F'}(X^{i^*(\alpha)}) = \Phi(X^\alpha)$, and the statement in this proposition is true by Theorem 9.0.5. □

Now we try to compute Φ from the two families of curves $\{a_i\}_{i=1}^m, \{b_j\}_{j=1}^n$ and the presentation of ϕ directly.

Let $q : \hat{S} \to S$ be the covering map induced by the maximal abelian cover of 3-manifold. Since ϕ is generic, each component of $q^{-1}(a_i)$ and $q^{-1}(b_j)$ is mapped to a_i and b_j by a homeomorphism respectively. After choosing a component of each of $q^{-1}(a_i)$ and $q^{-1}(b_j)$, and denote it by $\hat{a}_i$ and $\hat{b}_j$ respectively, we have $q^{-1}(a_i) = T \cdot \hat{a}_i$ and $q^{-1}(b_j) = T \cdot \hat{b}_j$. Then we can construct a weighted graph G with a T-action, called the *intersection graph*. Each vertex of the intersection graph G corresponds with a curve in $(\cup_{i=1}^m T \cdot \hat{a}_i) \cup (\cup_{j=1}^n T \cdot \hat{b}_j)$. Two vertices x, y in G are connected by an edge $e = e(x, y)$ if the corresponding curves in $\hat{S}$ intersect with each other, the weight $w(e(x, y))$ is the geometric intersection number $\#(x \cap y)$.

Given these information, we construct an $m \times n$ matrix $M(t)$, which is called the *intersection matrix*. The entries in $M(t)$ are elements in $\mathbb{Z}[T]$: $M_{i,j} = \sum_{t \in T} e(\hat{a}_i, t\hat{b}_j) \cdot t$. For any vector $\vec{v} = (v_1, \cdots, v_m)$ with $v_i \in \mathbb{Z}_{\geq 0}$, let

$$M^{\vec{v}} = \begin{pmatrix} I_{m\times m} & diag(v_1, \cdots, v_m) \cdot M(t) \\ 0 & I_{n\times n} \end{pmatrix}.$$

For $\vec{w} = (w_1, \cdots, w_n)$ with $w_i \in \mathbb{Z}_{\geq 0}$, let

$$M_{\vec{w}} = \begin{pmatrix} I_{m\times m} & 0 \\ diag(w_1, \cdots, w_n) \cdot M^T(t^{-1}) & I_{n\times n} \end{pmatrix}.$$

For vectors $\vec{v}$ and $\vec{w}$ as above, let the composition of Dehn-twists $T_{a_1}^{v_1} \cdots T_{a_m}^{v_m}$ and $T_{b_1}^{-w_1} \cdots T_{b_n}^{-w_n}$ denoted by $T_a^{\vec{v}}$ and $T_b^{-\vec{w}}$ respectively. Then any $\phi \in \mathcal{D}(a^+, b^-)$ can be conjugated to some $T_a^{\vec{v}_1} T_b^{-\vec{w}_1} \cdots T_a^{\vec{v}_s} T_b^{-\vec{w}_s}$ with $\vec{v}_i \neq \vec{0}$, $\vec{w}_i \neq \vec{0}$ for any i. With these notations, we have the following formula of Φ.

Proposition 11.1.7. *Suppose $\phi = T_a^{\vec{v}_1} T_b^{-\vec{w}_1} \cdots T_a^{\vec{v}_s} T_b^{-\vec{w}_s} w \in \mathcal{D}(a^+, b^-)$ is a generic pseudo-Anosov map, and $\{a_i\}_{i=1}^m$ intersect with $\{b_j\}_{j=1}^n$ at r points. Then $\Phi = (u-1)^{r-m-n} \cdot det(uI - M_{\vec{w}_s} M^{\vec{v}_s} \cdots M_{\vec{w}_1} M^{\vec{v}_1})$.*

Proof. Let $\hat{T}_{a_i}, \hat{T}_{b_j}^{-1}$ be the lift of $T_{a_i}, T_{b_j}^{-1}$ on $\hat{S}$ respectively. For each $\hat{a}_i \subset \hat{\tau}$ ($\hat{b}_j \subset \hat{\tau}$), we choose a branch $x_{i,1} \subset \hat{a}_i$ ($y_{j,1} \subset \hat{b}_j$). Let $x_{i,2}, \cdots, x_{i,k_i}$ be the other branches of $\hat{\tau}$ lying on $\hat{a}_i$, similarly for $\hat{b}_j$.

Then for $[x_{i,1}] - [x_{i,k}] \in \mathbb{Z}[T]^E$, we have $(\hat{T}_{b_j}^{-1})^*([x_{i,1}] - [x_{i,k}]) = [x_{i,1}] - [x_{i,k}]$ and $(\hat{T}_{a_{i'}})^*([x_{i,1}] - [x_{i,k}]) = [x_{i,1}] - [x_{i,k}]$ if $i \neq i'$, since the actions on $[x_{i,1}]$ and $[x_{i,k}]$ are trivial. Moreover, $(\hat{T}_{a_i})^*[x_{i,1}] = [x_{i,1}] + \sum_b [b]$, here b runs over all the branches of $\hat{\tau}$ that intersects with $\hat{a}_i$ to the left (or right, which depends on the presentative of $\hat{T}_{a_i}$). At the same time, we also have $(\hat{T}_{a_i})^*[x_{i,k}] = [x_{i,k}] + \sum_b [b]$, so

$(\hat{T}_{a_i})^*([x_{i,1}]-[x_{i,k}]) = [x_{i,1}]-[x_{i,k}]$. So we have $\hat{\phi}^*([x_{i,1}]-[x_{i,k}]) = [x_{i,1}]-[x_{i,k}]$ always holds. The same argument holds for $[y_{j,1}]-[y_{j,l}]$.

Let V_1 be the $\mathbb{Z}[T]$-submodule of $\mathbb{Z}[T]^E$ freely generated by $[x_{i,1}]-[x_{i,k}]$ and $[y_{j,1}]-[y_{j,l}]$, here $i \in \{1,\cdots,m\}, k \in \{2,\cdots,k_i\}, j \in \{1,\cdots,n\}, l \in \{2,\cdots,l_j\}$. V_1 is a $\hat{\phi}^*$-invariant submodule of $\mathbb{Z}[T]^E$ with $\hat{\phi}^*|_{V_1} = id_{V_1}$. The $\mathbb{Z}[T]$-dimension of V_1 is $\#\{\text{branches of } \tau\} - m - n$. It is easy to check that τ has $2r$ branches, so $dim_{\mathbb{Z}[T]}V_1 = 2r-m-n$.

To simplify notions, let $x_i = x_{i,1}$ and $y_j = y_{j,1}$. We have another $\mathbb{Z}[T]$-submodule V_2 of $\mathbb{Z}[T]^E$ which is freely generated by $x_1,\cdots,x_m$ and $y_1,\cdots,y_n$. then $\mathbb{Z}[T]^E = V_1 \oplus V_2$. We have $(\hat{T}_{b_j}^{-1})^*([x_i]) = [x_i]$ and $(\hat{T}_{a_{i'}})^*([x_i]) = [x_i]$ if $i \neq i'$. Moreover, $(\hat{T}_{a_i})^*([x_i]) = [x_i] + \sum_{j=1}^m M_{i,j}(t)[y_j]$ *mod* V_1. Similarly, $(\hat{T}_{b_j})^*([y_j]) = [y_j] + \sum_{i=1}^n M_{j,i}(t^{-1})[x_i]$ *mod* V_1, and all the other Dehn-twists act trivially on y_j. These actions coincide with the action of $M^{\vec{v}}$ and $M_{\vec{w}}$. Since $\phi = T_a^{\vec{v}_1}T_b^{-\vec{w}_1}\cdots T_a^{\vec{v}_s}T_b^{-\vec{w}_s}$ is a composition of Dehn-twists, the action matrix of $\hat{\phi}^*$ on $\mathbb{Z}[T]^E/V_1$ is given by $M_{\vec{w}_s}M^{\vec{v}_s}\cdots M_{\vec{w}_1}M^{\vec{v}_1}$. So $det(uI - P_E(t)) = (u-1)^{2r-m-n}\cdot det(uI - M_{\vec{w}_s}M^{\vec{v}_s}\cdots M_{\vec{w}_1}M^{\vec{v}_1})$.

Since $\hat{\phi}$ fixes each switch of $\hat{\tau}$, we have $\hat{\phi}^* = id_{\mathbb{Z}[T]^V}$ on switches. So $det(uI - P_V(t)) = (u-1)^r$, and $\Phi = (u-1)^{r-m-n}\cdot det(uI - M_{\vec{w}_s}M^{\vec{v}_s}\cdots M_{\vec{w}_1}M^{\vec{v}_1})$. □

11.2 Rational minimal points from Penner's construction

In this section, we will show an interesting example of pseudo-Anosov maps with rational minimal point. These examples are given by Penner's construction. If we twist the a curves and b curves proportionally each time, then the dilatation function has a nice symmetric property.

Proposition 11.2.1. *Let* $\vec{v} = (v_1, \cdots, v_m)$, $\vec{w} = (w_1, \cdots, w_n)$ *be two vectors with* $v_i, w_j \in \mathbb{Z}_+$, *and take integers* $x_k, y_k \in \mathbb{Z}_+, i = 1, \cdots, s$. *Suppose* $\phi = T_a^{x_1 v} T_b^{-y_1 w} \cdots T_a^{x_s v} T_b^{-y_s w} \in \mathcal{D}(a^+, b^-)$ *is a generic pseudo-Anosov map on a surface* S, *then* $\Phi(u,t) = \Phi(u,t^{-1})$ *and* $m_F = \frac{[S]}{|\chi(S)|}$.

Proof. Let $D = diag(v_1, \cdots, v_m)$ and $D' = diag(w_1, \cdots, w_n)$

By Proposition 11.1.7, we have

$$\Phi(u,t) = (u-1)^{r-m-n} \cdot det(uI - (M_{y_s \vec{w}} M^{x_s \vec{v}}) \cdots (M_{y_1 \vec{w}} M^{x_1 \vec{v}}))$$

. Then a direct computation gives,

$$M_{y_i \vec{w}} M^{x_i \vec{v}} = \begin{pmatrix} I_{m\times m} & x_i D \cdot M(t) \\ y_i D' \cdot M^T(t^{-1}) & I_{n\times n} + x_i y_i D' \cdot M^T(t^{-1}) \cdot D \cdot M(t) \end{pmatrix}.$$

By induction, we can show that

$$(M_{y_s \vec{w}} M^{x_s \vec{v}}) \cdots (M_{y_1 \vec{w}} M^{x_1 \vec{v}}) = \begin{pmatrix} I_{m\times m} + E(t) & F(t) \\ G(t) & I_{n\times n} + H(t) \end{pmatrix}$$

$$= \begin{pmatrix} I_{m\times m} + P_1\left(D \cdot M(t) \cdot D' \cdot M^T(t^{-1})\right) & D \cdot M(t) \cdot P_2\left(D' \cdot M^T(t^{-1}) \cdot D \cdot M(t)\right) \\ D' \cdot M^T(t^{-1}) \cdot P_3\left(D \cdot M(t) \cdot D' \cdot M^T(t^{-1})\right) & I_{n\times n} + P_4\left(D' \cdot M^T(t^{-1}) \cdot D \cdot M(t)\right) \end{pmatrix},$$

here P_1, P_2, P_3, P_4 are polynomials.

So

$$\frac{\Phi(u,t)}{(u-1)^{r-m-n}} = det \begin{pmatrix} (u-1)I_{m\times m} - E(t) & -F(t) \\ -G(t) & (u-1)I_{n\times n} - H(t) \end{pmatrix}$$

$$= det\left((u-1)I_{m\times m} - E(t)\right) \cdot$$

$$det\left((u-1)I_{n\times n} - H(t) - G(t) \cdot [(u-1)I_{m\times m} - E(t)]^{-1} \cdot F(t)\right).$$

By taking transpose of the matrix, we get

$$\frac{\Phi(u,t)}{(u-1)^{r-m-n}} = det\begin{pmatrix} (u-1)I_{m\times m} - E^T(t) & -G^T(t) \\ -F^T(t) & (u-1)I_{n\times n} - H^T(t) \end{pmatrix}$$

$$= det\left((u-1)I_{m\times m} - E^T(t)\right)\cdot$$

$$det\left((u-1)I_{n\times n} - H^T(t) - F^T(t)\cdot[(u-1)I_{m\times m} - E^T(t)]^{-1}\cdot G^T(t)\right).$$

We also have expressions as the following:

$$E(t) = P_1\left(D\cdot M(t)\cdot D'\cdot M^T(t^{-1})\right),\ F(t) = D\cdot M(t)\cdot P_2\left(D'\cdot M^T(t^{-1})\cdot D\cdot M(t)\right),$$

$$G(t) = D'\cdot M^T(t^{-1})\cdot P_3\left(D\cdot M(t)\cdot D'\cdot M^T(t^{-1})\right),\ H(t) = P_4\left(D'\cdot M^T(t^{-1})\cdot D\cdot M(t)\right).$$

Using the expressions above, we can check that

$$det\left((u-1)I_{m\times m} - E(t)\right) = det\left((u-1)I_{m\times m} - E^T(t^{-1})\right),$$

and

$$det\left((u-1)I_{n\times n} - H(t) - G(t)\cdot[(u-1)I_{m\times m} - E(t)]^{-1}\cdot F(t)\right) =$$

$$det\left((u-1)I_{n\times n} - H^T(t^{-1}) - F^T(t^{-1})\cdot[(u-1)I_{m\times m} - E^T(t^{-1})]^{-1}\cdot G^T(t^{-1})\right).$$

So $\Phi(u,t) = \Phi(u,t^{-1})$.

Let $(u, t_1, \cdots, t_{b-1})$ be a basis of $H_1(N;\mathbb{Z})/Tor$, with $([S], \alpha_1, \cdots, \alpha_{b-1})$ be the dual basis of $H^1(N;\mathbb{Z})$. By Lemma 11.1.3, we have $F \subset \{\frac{1}{|\chi(S)|}[S] + x_1\alpha_1 + \cdots + x_{b-1}\alpha_{b-1} | x_i \in \mathbb{R}\}$. Since $\Phi(u,t) = \Phi(u,t^{-1})$, for any $x = x_1\alpha_1 + \cdots + x_{b-1}\alpha_{b-1}$ satisfying $\frac{1}{|\chi(S)|}[S] + x \in F$, we have $\lambda(\frac{1}{|\chi(S)|}[S] + x) = \lambda(\frac{1}{|\chi(S)|}[S] - x)$. By the uniqueness of the minimal point m_F, we have $m_F = \frac{1}{|\chi(S)|}[S]$.

□

Then we have the following immediate corollary.

Corollary 11.2.2. *For pseudo-Anosov maps as in Proposition 11.2.1, the minimal point m_F is a rational point.*

This corollary holds since the dilatation function $\lambda(\cdot)$ is symmetric on the fibered face F. However, the symmetric property of $\lambda(\cdot)$ here does not have an immediate geometric interpretation as in Proposition 10.2.1.

Chapter 12

Examples of irrational minimal points

12.1 Drilling and branched covering theorems

12.1.1 The drilling theorem

Given a pseudo-Anosov map ϕ on a closed surface S, it is associated with a hyperbolic surface bundle $N = M(S, \phi) = S \times I/(x, 0) \sim (\phi(x), 1)$ and a suspension flow on N. Moreover, this flow is universal for the fibered face. We will call a closed orbit of the suspension flow a *primitive closed orbit* if it goes around an embedded circle in N for only once, and we sometimes only call it a closed orbit. If we want to talk about a closed orbit that goes around an embedded circle for more than once, we will call it a *nonprimitive closed orbit*.

Take a primitive closed orbit $c \subset N$ of the suspension flow on $N = M(S, \phi)$. Let the manifold given by drilling N along c be $N_c = N \setminus c$, which is also a hyperbolic surface bundle. Let $S_c = S \setminus (S \cap c)$, and $\phi_c = \phi|_{S_c}$, then we have $N_c = M(S_c, \phi_c)$. There is a natural inclusion $i_c : \ N_c \to N$.

Lemma 12.1.1. $i_c^* : H^1(N; \mathbb{R}) \to H^1(N_c; \mathbb{R})$ *is an isomorphism.*

Proof. In the proof of this Lemma, all the (co)homology groups have $\mathbb{R}$-coefficients, and we will omit the coefficient.

Since $N = N_c \cup_{T^2} D^2 \times S^1$, we have the M-V sequence

$$0 \to H^1(N) \to H^1(N_c) \oplus H^1(D^2 \times S^1) \to H^1(T^2) \to \cdots .$$

Since $H^1(D^2 \times S^1) \to H^1(T^2)$ is injective, $i_c^* : H^1(N) \to H^1(N_c)$ is injective. So it suffice to show that $H^1(N)$ and $H^1(N_c)$ have the same dimension. By the Lefschetz duality, we need only to show that $H_2(N)$ and $H_2(N_c, \partial N_c)$ have the same dimension.

By the excision axiom, we have $H_2(N_c, \partial N_c) \cong H_2(N, c)$. By the M-V sequence

$$0 \to H_2(N) \to H_2(N, c) \to H_1(c) \to H_1(N) \to \cdots ,$$

and $H_1(c) \to H_1(N)$ is injective, $H_2(N) \cong H_2(N, c) \cong H_2(N_c, \partial N_c)$. □

In general, if S is not a closed surface, $dim(H^1(N_c))$ may be greater than $dim(H^1(N))$.

Let $C \subset H^1(N; \mathbb{R})$ and $C' \subset H^1(N_c; \mathbb{R})$ be the fibered cones containing the dual of $[S]$ and $[S_c]$ respectively, while F and F' be the corresponding fibered face.

For any $\alpha \in C$, it is easy to see that $\lambda_C(\alpha) = \lambda_{C'}(i_c^*(\alpha))$, since it holds for integer classes. Since $\lambda(\alpha)$ goes to infinity when α goes to ∂C, we have $i_c^*(C) = C'$. Let $x \in H_1(N; \mathbb{Z})/Tor$ be the dual of the fibered cone C, i.e. for any $\alpha \in C$, $\|\alpha\| = \langle \alpha, x \rangle$ holds. Choose an orientation on c such that c intersects with $[S]$ positively, and we still use c to denote the homology class of c. Then $\|i_c^*(\alpha)\| = \|\alpha\| + \langle \alpha, c \rangle = \langle \alpha, c + x \rangle$ for any $\alpha \in C$. This equality implies that although $i_c^*(C) = C'$, $i_c^*(F)$ may not be parallel with F'.

We use F_c to denote $(i_c^*)^{-1}(F') \subset H^1(N; \mathbb{R})$, and let m_{F_c} be the minimal point of the restriction of $\lambda_C(\cdot)$ on F_c, then we have $i_c^*(m_{F_c}) = m_{F'}$. So to compute $A(S', \phi')$, we need only to compute the coordinates of m_{F_c}. Actually, if x and c are linear

dependent, F_c is parallel with F, so m_{F_c} is a rational multiple of m_F. Otherwise, F_c is tilted with respect to F, and the number theoretical properties of m_{F_c} and m_F can be different from each other.

Let c_1 and c_2 be two different oriented closed orbits of the suspension flow, such that both of them intersect with $[S]$ positively. We say c_1 and c_2 are *drilling equivalent* if $x+c_1$ is linear dependent with $x+c_2$. In this case, F_{c_1} is parallel with F_{c_2}, so $m_{F_{c_1}}$ is a rational multiple of $m_{F_{c_2}}$ and $A(S_{c_1}, \phi_{c_1}) = A(S_{c_2}, \phi_{c_2})$. Then we have the following *Drilling Theorem*.

Theorem 12.1.2. *For all but finitely many drilling equivalent classes c, $A(S_c, \phi_c) \neq \mathbb{Q}$.*

Proof. For any drilling class, take a closed orbit representative c, we have $F_c = \{\alpha \in C |\ \langle \alpha, c + x\rangle = 1\}$. Let m_{F_c} be the minimal point of the restriction of $\lambda(\cdot)$ on F_c.

Let the Teichmüller polynomial be expressed as $\Theta_F = \sum_g a_g \cdot g$, then by Theorem 9.0.5,

$$\sum_g a_g \lambda(m_{F_c})^{\langle m_{F_c}, g\rangle} = 0.$$

Let $b = b_1(N)$, take a basis $(v_1, \cdots, v_{b-1})$ of the tangent plane $T_{m_{F_c}} F_c$. Since m_{F_c} is the minimal point, by taking derivative along the direction of v_i, we also have equations

$$\sum_g a_g \langle v_i, g\rangle \lambda(m_{F_c})^{\langle m_{F_c}, g\rangle} = 0,\ i = 1, \cdots, b-1.$$

Let $(\alpha_1, \cdots, \alpha_b)$ be a basis of $H^1(N; \mathbb{Z})$, and $(x_1, \cdots, x_b)$ be the dual basis of $H_1(N; \mathbb{Z})/Tor$. Suppose m_{F_c} is a rational class, then $m_{F_c} = \sum_{i=1}^b \frac{p_i}{q_c}\alpha_i$, here $p_i, q_c \in \mathbb{Z}$ and $gcd(p_1, \cdots, p_b, q_c) = 1$. Since $\langle m_{F_c}, x + c\rangle = 1$, $gcd(p_1, \cdots, p_b) = 1$ holds. For each g appears in the Teichmüller polynomial, let $g = \sum_{i=1}^b g_i x_i$, here $g_i \in \mathbb{Z}$.

Then $(\lambda(m_{F_c})^{\frac{p_1}{q_c}}, \cdots, \lambda(m_{F_c})^{\frac{p_b}{q_c}})$ is a solution of the following equation:

$$\begin{cases} \sum a_g X_1^{g_1} \cdots X_b^{g_b} = 0, \\ \sum a_g \langle v_1, g \rangle X_1^{g_1} \cdots X_b^{g_b} = 0, \\ \cdots \\ \sum a_g \langle v_{b-1}, g \rangle X_1^{g_1} \cdots X_b^{g_b} = 0. \end{cases}$$

Here only $v_1, \cdots, v_{b-1}$ depend on the closed orbit c, actually only depends on the drilling class up to rational multiple. So only the coefficients of the equation depend on the drilling class, the degrees do not. By solving the equation by eliminating free variables inductively, we know that the number field $\mathbb{F} = \mathbb{Q}(\lambda(m_{F_c})^{\frac{p_1}{q_c}}, \cdots, \lambda(m_{F_c})^{\frac{p_b}{q_c}})$ is a finite extension over $\mathbb{Q}$ with $[\mathbb{F} : \mathbb{Q}] \leq D$ for some D. Here D only depends on Θ_F, but does not depend on c. Since $gcd(p_1, \cdots, p_b) = 1$, we have $\mathbb{F} = \mathbb{Q}(\lambda(m_{F_c})^{\frac{1}{q_c}})$, so $\deg(\lambda(m_{F_c})^{\frac{1}{q_c}}) \leq D$. Note that $\lambda(m_{F_c})^{\frac{1}{q_c}}$ only depends on the drilling class, but does not depend on the closed orbit representative.

Since $\lambda_c = \lambda(m_{F_c})^{\frac{1}{q_c}}$ is the largest root of the Teichmüller polynomial Θ_F at the cohomology class with coordinate $(p_1, \cdots, p_b)$ (Remark 9.0.6), i.e. it is the largest root of $\sum a_g X^{\langle q_c m_{F_c}, g \rangle} = 0$, all the algebraic conjugations of λ_c have modulus smaller or equal to λ_c. On the other hand, by Corollary 9.0.8, $\sum_g a_g X^{\langle q_c m_{F_c}, g \rangle}$ has a unique leading term $X^{\langle q_c m_{F_c}, d \cdot u \rangle}$ with coefficient 1 and all the terms have integer coefficients and integer powers. So $\lambda_c \leq \sum_g |a_g| = D'$, and λ_c is an algebraic integer.

Given $D, D' \in \mathbb{Z}_+$, there are only finitely many algebraic integers λ, such that $\deg(\lambda) \leq D$, $|\lambda| \leq D'$, and λ has the greatest modulus among its algebraic conjugations. This is because the minimal polynomial of λ has bounded degree and the coefficients are also bounded.

So if there are infinitely many drilling classes with rational invariants, then there are infinitely many inequivalent drilling class representatives $c_1, c_2, \cdots$ such that $\lambda(m_{F_{c_i}})^{\frac{1}{q_{c_i}}} = \lambda_{c_i} = \lambda_0$. Here $m_{F_{c_i}}$ is the minimal point of the restriction of $\lambda(\cdot)$ on

F_{c_i}, while $q_{c_i}m_{F_{c_i}}$ is an integer class with $\lambda(q_{c_i}m_{F_{c_i}}) = \lambda_0$. Since $q_{c_i}F_{c_i}$ is the tangent plane of the hypersurface $\{\alpha \in C|\ \lambda(\alpha) = \lambda_0\}$ with tangent point $q_{c_i}m_{F_{c_i}}$, different drilling class representatives c_i correspond with different integer points $q_{c_i}m_{F_{c_i}}$. So there are infinitely many integer points $q_{c_i}m_{F_{c_i}}$ on the hypersurface $\lambda(\alpha) = \lambda_0$.

However, we claim that for any fixed $\lambda_0 \in \mathbb{R}_+$, there are at most finitely many integer points on the hypersurface $\lambda(\alpha) = \lambda_0$ which corresponds with $q_c m_{F_c}$ for some drilling class representative c, thus get a contradiction.

Proof of Claim: Suppose there are infinitely many integer points $\alpha \in C$ with $\lambda(\alpha) = \lambda_0$ which correspond with $q_c m_{F_c}$.

Let the fibered cone C be equal to $\{x \in H^1(N, \mathbb{R})|\ p_i(x) > 0, i = 1, \cdots, n\}$, here each p_i is an integer homology class in $H_1(N, \mathbb{Z})/Tor$. Take an integer point $\beta \in C$ such that $\lambda(\beta) = \lambda_0$, and let $P_i = p_i(\beta)$. Then we define $C' = \{\alpha \in C|p_i(\alpha) \geq P_i, i = 1, \cdots, n\}$.

Suppose there is an integer point $\beta' \in C'$, $\beta' \neq \beta$ such that $\lambda(\beta') = \lambda_0$, and $\beta' = q_c m_{F_c}$ for some drilling class c. Since $\beta' \in C'$, we have $p_i(\beta' - \beta) = p_i(\beta') - P_i \geq 0$. Let $\bar{C}$ be the closure of C, then $\bar{C} = \{x \in H^1(N, \mathbb{R})|\ p_i(x) \geq 0, i = 1, \cdots, n\}$, so we have $\beta' - \beta \in \bar{C}$. Since $\beta \in C$ and $\beta \neq \beta'$, so $\langle \beta, c + x\rangle > 0$, and $\langle \beta' - \beta, c + x\rangle > 0$ for any closed orbit c.

Since $\beta' = q_c m_{F_c}$, β' is the minimal point of the restriction of $\lambda(\cdot)$ on $q_c F_c = \{\alpha \in C|\langle \alpha, c + x\rangle = \langle \beta', c + x\rangle\}$. However $\lambda(\frac{\langle \beta', c+x\rangle}{\langle \beta, c+x\rangle}\beta) = \lambda(\beta)^{\frac{\langle \beta, c+x\rangle}{\langle \beta', c+x\rangle}} < \lambda(\beta) = \lambda(\beta')$, while $\frac{\langle \beta', c+x\rangle}{\langle \beta, c+x\rangle}\beta \in \{\alpha \in C|\langle \alpha, c + x\rangle = \langle \beta', c + x\rangle\}$. It contradicts with the fact that β' is the minimal point of the restriction of $\lambda(\cdot)$ on $q_c F_c$.

So for any integer point $\beta' \in C$ satisfying the condition in the claim, we have $p_i(\beta') = j$, for some $i \in \{1, \cdots, n\}$ and $j \in \{1, \cdots, P_i - 1\}$, or $\beta' = \beta$. Since there are infinitely many such integer points, infinitely many of them satisfy $p_{i_0}(\alpha) = j_0$. Here $\{\alpha \in C|\ p_{i_0}(\alpha) = j_0\}$ is a codimension 1 hyperplane of C.

The argument we used above can be repeated inductively to reduce the dimension. Finally we can reduce to the case that there is a ray $\mathcal{R} \subset C$ which contains infinitely many integer points α with $\lambda(\alpha) = \lambda_0$. However, since $\frac{1}{\log \lambda(\cdot)}$ is either strictly concave or linear (nota constant) on rays ([30], [32]), there are at most two points on $\mathcal{R}$ assuming λ_0 by $\lambda(\cdot)$, and we get a contradiction. □

12.1.2 The branched covering theorem

An analogy of the drilling construction is the following branched covering construction. The branched covering construction can give pseudo-Anosov maps on closed surfaces with irrational minimal points.

Let $N = M(S, \phi)$ be a closed hyperbolic surface bundle, let c be an oriented closed orbit of the suspension flow, and $d(c)$ be the greatest common divisor of the coordinates of c in $H_1(N; \mathbb{Z})/Tor$. If $gcd(|Tor(H_1(N))|, d(c)) = 1$, we can construct a $d(c)$-sheet cyclic branched cover of N along c. To make this construction, we will first construct a cyclic cover of $N \setminus c$, then fill in the solid torus.

We have the following long exact sequence (with coefficients in $\mathbb{Z}$):

$$H_2(D^2 \times S^1) \oplus H_2(N \setminus c) \to H_2(N) \to H_1(T^2) \to H_1(D^2 \times S^1) \oplus H_1(N \setminus c) \to H_1(N) \to 0.$$

For any $\alpha \in H_2(N)$, it is in the image of the first map in the exact sequence if and only if $\alpha \cap c = 0$. Since $H_2(N) \cong H^1(N) \cong Hom(H_1(N), \mathbb{Z})$, we know that for any $\alpha \in H_2(N)$, $d(c)$ is a divisor of $\alpha \cap c$, and there exists $\alpha_0 \in H_2(N)$ such that $\alpha_0 \cap c = d(c)$. So the image of the second map is $\{kd(c)[m] |\ k \in \mathbb{Z}\}$, here $[m]$ is the meridian class of the solid torus neighborhood of c. Then we know that $[m]$ is a torsion element in $H_1(N \setminus c)$ with order $d(c)$.

If $|gcd(Tor(H_1(N))|, d(c)) = 1$, since $|Tor(H_1(N \setminus c))| = d(c) \cdot |Tor(H_1(N))|$, $[m]$ generates a direct summand of $Tor(H_1(N \setminus c))$ of order $d(c)$. So $Tor(H_1(N \setminus c)) =$

$\mathbb{Z}_{d(c)} \oplus A$. Then we can define a map $H_1(N \setminus c) \to Tor(H_1(N \setminus c)) \to \mathbb{Z}_{d(c)}$, which gives a cyclic cover of $N \setminus c$, thus a cyclic branched cover $p^c : N^c \to N$ along c of degree $d(c)$. Let $S^c = (p^c)^{-1}(S)$ (which is connected), then S^c gives a surface bundle structure of N^c, and let ϕ^c be the corresponding pseudo-Anosov monodromy.

Remark 12.1.3. *We can also get some other cyclic branched covers of N along c even if $gcd(|Tor(H_1(N))|, d(c)) \neq 1$, but the covering degree can not be computed by simply considering the homology class of c.*

As the definition of the drilling equivalent class, we will define the branched covering equivalent class here. For two different closed orbits of the suspension flow c_1 and c_2, we say c_1 and c_2 are *branched covering equivalent* if $d(c_1)x + (d(c_1) - 1)c_1$ is a rational multiple of $d(c_2)x + (d(c_2) - 1)c_2$.

Then we have the following *Branched Covering Theorem*.

Theorem 12.1.4. *For all but finitely many branched covering classes c satisfying $d(c) > 1$ and $gcd(d(c), |Tor(H_1(N; \mathbb{Z}))|) = 1$, $A(S^c, \phi^c) \neq \mathbb{Q}$.*

Proof. Let C be the fibered cone in $H^1(N; \mathbb{R})$ containing the dual of $[S]$ and F be the corresponding fibered face. F' and C' are defined similarly for $[S^c]$.

Since $p^c : N^c \to N$ is a $d(c)$-sheet cyclic branched covering, we have an $H = \mathbb{Z}_{d(c)}$ action on N^c. As the regular covering case (Lemma 10.1.2), we have that $H^1(N^c; \mathbb{R})^H = (p^c)^*(H^1(N; \mathbb{R}))$. Since this H-action fixes $[S^c]$, C' and F' are both invariant subsets of this H-action. Since the minimal point is unique, we have $m_{F'} \in (F')^H$.

For a primitive element $\alpha \in H^1(N; \mathbb{Z}) \cap C$ with its corresponding fiber surface S_α, the corresponding fiber surface S^c_α of $(p^c)^*(\alpha)$ is a $d(c)$-sheet cyclic branched cover of surface S_α and the monodromy on S^c_α is a lifting of the monodromy on S_α. In this case, we have $\lambda((p^c)^*(\alpha)) = \lambda(\alpha)$, so this equality holds for any $\alpha \in C$.

One the other hand , by the Riemann-Hurwitz formula, $\|(p^c)^*(\alpha)\| = \langle \alpha, (d(c)-1)c + d(c)x\rangle$ for all $\alpha \in H^1(N;\mathbb{Z}) \cap C$. So this equality also holds for any $\alpha \in C$.

As in the drilling construction, $(C')^H = (p^c)^*(C)$. By considering the Thurston norm, $((p^c)^*)^{-1}((F')^H) = \{\alpha \in C |\ \langle \alpha, (d(c)-1)c + d(c)x\rangle = 1\}$, and we denote it by F^c. Since $\lambda((p^c)^*(\alpha)) = \lambda(\alpha)$, the minimal point m_{F^c} of the restriction of $\lambda(\cdot)$ on F^c satisfies $(p^c)^*(m_{F^c}) = m_{F'}$. So we need only to show that for all but infinitely many branched covering classes c satisfying the assumption of the theorem, m_{F^c} is irrational. The remaining part of the proof is same with the proof of Theorem 12.1.2. □

12.1.3 Existence of infinitely many closed orbit classes

To make the Drilling Theorem and Branched Covering Theorem really give us some drilling classes and branched covering classes with irrational invariants, we need to show that, for any pseudo-Anosov map, there are infinitely many different drilling classes and branched covering classes (satisfying the condition in the Branched Covering Theorem). We have the following lemma which helps us to find enough closed orbits of the suspension flow. The proof of this Lemma is quite tedious and it is possible that this result is well-known for experts, but the author can not find a proper literature about it.

Lemma 12.1.5. *For any pseudo-Anosov map ϕ on surface S, the following statements hold.*

(a) There exists infinitely many different drilling classes in $N = M(S,\phi)$.

(b) There exists infinitely many different branched covering classes in $N = M(S,\phi)$ satisfying the conditions in the Branched Covering Theorem.

Proof. Let $H_1(N;\mathbb{Z})/Tor = \mathbb{Z}[u] \oplus T$, here u gives the S^1-direction and T is the image of $H_1(S;\mathbb{Z})$. This decomposition will give us a coordinate of $H_1(N;\mathbb{Z})/Tor$. Let $x = (n_0, t_0) \in H_1(N;\mathbb{Z})/Tor$ be the homology class dual with fibered face F.

Here (n_0, t_0) is the coordinate of x under the above decomposition of $H_1(N;\mathbb{Z})/Tor$, with $n_0 \in \mathbb{Z}_+$. Let $p : \widetilde{N} \to N$ be the maximal free abelian cover and $\widetilde{S}$ be one component of $p^{-1}(S)$.

Take a Markov partition (rectangle partition) $\mathcal{R} = \{R_i\}_{i=1}^k$ of the surface S with respect to ϕ, the transition matrix $M_{k\times k}$ is defined by $M_{i,j} = |\phi^{-1}(int(R_j)) \cap R_i|$. Then M is a Perron-Frobenius matrix (see [9] and [1] Expose 10), which means that for any $n \geq k$, all the entries of M^n are positive integers. Furthermore, we can lift this Markov partition to a Markov partition on $\widetilde{S}$ with $\widetilde{\mathcal{R}} = T \cdot \{\widetilde{R}_i\}_{i=1}^k$. We also take a lift of ϕ corresponding with $u \in H_1(N;\mathbb{Z})/Tor$ and denote it by $\widetilde{\phi}$. The transition matrix $\widetilde{M}_{k\times k}$ is defined by $\widetilde{M}_{i,j} = \sum |\widetilde{\phi}^{-1}(int(\widetilde{R}_j)) \cap t \cdot \widetilde{R}_i| \cdot t$. Then the diagonal entry $\widetilde{M}^m_{n,n}$ has a nonzero t^{-1} term implies that N has a closed orbit (possibly nonprimitive) with homology class (m, t) which intersects with R_n. This property allows us to use powers of the matrix $\widetilde{M}$ to study (possibly nonprimitive) closed orbits of N.

Let $Cone(\phi) \subset H_1(N;\mathbb{R})$ be the smallest convex closed cone containing all the homology classes of primitive periodic orbits. In Expose 14 of [1], Fried showed that for any $\alpha \in H^1(N;\mathbb{R})$, α lies in the fibered cone C if and only if $\langle \alpha, x\rangle \geq 0$ for any $x \in Cone(\phi)$. Since we have $b_1(N) \geq 2$, ϕ has two closed orbits d_1, d_2' with linear independent homology classes. We suppose that $d_1 \cap R_1 \neq \emptyset$ and $d_2' \cap R_2 \neq \emptyset$.

Since $\widetilde{M}$ is Perron-Fronbenius, all the entries of $\widetilde{M}^k$ are nonzero, so $\widetilde{M}^k_{1,2}, \widetilde{M}^k_{2,1} \neq 0$. By precompose and postcompose $(d_2')^t$ with two fixed paths given by $\widetilde{M}^N_{1,2}, \widetilde{M}^N_{2,1}$, we can get a possibly nonprimitive closed orbit d_2 which intersects with R_1. We can also choose t to be large enough such that d_1 and d_2 are linearly independent. We can further take powers of d_1 and d_2 to make them share the same coefficient on the u-component. Without changing the symbol and abusing the notation, we get two possibly nonprimitive closed orbits $d_1 = (m, t_1')$ and $d_2 = (m, t_2')$. So $\widetilde{M}^m_{1,1}$ has both $t_1'^{-1}$ term and $t_2'^{-1}$ terms with $t_1' \neq t_2'$.

Let d be the largest integer such that $(t_1' - t_2')/d$ is an integer class. Since $\widetilde{M}$ is a Perron-Frobenius matrix, there exists a prime number p such that $\widetilde{M}_{1,1}^p$ has two terms t_1^{-1} and t_2^{-1} such that $t_1 - t_2 = t_1' - t_2'$, and $p > max\{k+m, n_0, d, |Tor(H_1(N;\mathbb{Z}))|\}$. This gives closed orbits $c_1 = (p, t_1)$ and $c_2 = (p, t_2)$. Since $p > d$ and p is a prime number, there exists a positive integer n such that $p|nd+1$.

Proof of (a): For any positive integer k, $\widetilde{M}_{1,1}^{(kpd+nd+1)p}$ gives possibly nonprimitive closed orbits $((kpd+nd+1)p, (kpd+nd+1)t_1 + x(t_2 - t_1))$, here x is chosen from $\{0, \cdots, kpd+nd+1\}$. Then we will choose x such that $gcd(x, kpd+nd+1) = 1$. Since $p|kpd+nd+1$, $gcd(x, (kpd+nd+1)p) = 1$. For any prime factor of $(kpd+nd+1)p$, it is a factor of every coordinate of $(kpd+nd+1)t_1$, but is not a factor of some coordinate of $x(t_2 - t_1)$ since $gcd(d, (kpd+nd+1)) = 1$. So N has primitive closed orbits with homology classes $c = ((kpd+nd+1)p, (kpd+nd+1)t_1 + x(t_2 - t_1))$ for any positive integer k and any $x \in \{0, \cdots, kpd+nd+1\}$ with $gcd(x, kpd+nd+1) = 1$.

Now we need only to show that there are infinitely many different drilling classes herein. For $c + x = ((kpd+nd+1)p + n_0, (kpd+nd+1)t_1 + x(t_2 - t_1) + t_0)$, the first coordinate can be rewritten as $kp^2d + (npd + p + n_0)$. Let $d' = gcd(p^2d, npd + p + n_0)$, since $p > n_0$, we have $d' \leq d < p$. By the Dirichlet Theorem on arithmetic progressions, there are infinitely many positive integers k_i such that $(k_ip^2d + (npd + p + n_0))/d'$ is a prime number. Suppose there are only finitely many pairwise linearly independent classes for all choice of $((k_ipd+nd+1)p + n_0, (k_ipd+nd+1)t_1 + x(t_2 - t_1) + t_0)$ with $x \in \{0, \cdots, k_ipd+nd+1\}$ and $gcd(x, k_ipd+nd+1) = 1$. Then for i large enough, the prime number $(k_ip^2d + (npd + p + n_0))/d'$ must be a factor of all the coordinates of $((k_ipd+nd+1)p + n_0, (k_ipd+nd+1)t_1 + x(t_2 - t_1) + t_0)$.

Since we have $\phi(k_ipd+nd+1)$ choices of x, here $\phi(\cdot)$ is Euler's totient function, there exists x_1 and x_2 coprime with $k_ipd+nd+1$ and $0 < x_1 - x_2 \leq \frac{k_ipd+nd+1}{\phi(k_ipd+nd+1)-1}$. Since $(k_ip^2d + (npd + p + n_0))/d'$ is a factor of all coordinates of both $((k_ipd+nd+1)p+n_0, (k_ipd+nd+1)t_1+x_1(t_2-t_1)+t_0)$ and $((k_ipd+nd+1)p+n_0, (k_ipd+nd+1)t_1+$

$x_2(t_2-t_1)+t_0)$, it is a factor of all coordinates of $(x_1-x_2)(t_1-t_2)$. Let D be the upper bound of the norm of all coordinates of $t_1-t_2=t_1'-t_2'$, then we have $k_ipd+nd+1<\frac{k_ip^2d+npd+p+n_0}{d'}\leq D(x_1-x_2)\leq D\frac{k_ipd+nd+1}{\phi(k_ipd+nd+1)-1}$, so $\phi(k_ipd+nd+1)-1\leq D$. Since $\{k_ipd+nd+1\}$ is an integer sequence going to the infinity, this is absurd. So we have infinitely many different drilling equivalent classes.

Proof of (b): Choose a prime number q such that q is coprime with both $|Tor(H_1(N;\mathbb{Z}))|$ and p. For any positive integer k, $\widetilde{M}_{1,1}^{(kpd+nd+1)pq}$ gives a possibly nonprimitive closed orbit c with its homology class $((kpd+nd+1)pq,(kpd+nd+1)qt_1+xq(t_2-t_1))$. Here x is chosen from $\{0,\cdots,kpd+nd+1\}$ and coprime with $kpd+nd+1$. As the proof of (a), we can show that $d(c)=q$ for this homology class, which is coprime with $|Tor(H_1(N;\mathbb{Z}))|$.

Furthermore, we can take the closed orbit c to first go along c_2 for xq times, and then go along c_1 for $(kpd+nd+1-x)q$ times. Since $d(c)=q$ is a prime number, if c is a nonprimitive closed orbit, then c repeats traveling q times around a primitive closed orbit. However, it contradicts with the choice of c and the fact that $x\neq 0$ and $x\neq kpd+nd+1$. So here we can choose c to be a primitive closed orbit, and it satisfies the conditions in the Branched Covering Theorem.

Now $d(c)x+(d(c)-1)c=((kpd+nd+1)pq(q-1)+qn_0,(kpd+nd+1)q(q-1)t_1+xq(q-1)(t_2-t_1)+qt_0)$. The first term is $q\left[(p^2d(q-1))k+((nd+1)p(q-1)+n_0)\right]$. Let $d'=gcd(p^2d(q-1),(nd+1)p(q-1)+n_0)$ then $d'\leq d(q-1)<p(q-1)$. By the Dirichlet Theorem again, there are infinitely many k_i such that $\frac{(p^2d(q-1))k_i+((nd+1)p(q-1)+n_0)}{d'}$ is a prime number. Then the remaining part of the proof is same with the proof of (a). □

Although we do not have an explicit example in hand yet, Theorem 12.1.2 , Theorem 12.1.4 and Lemma 12.1.5 imply that there exists pseudo-Anosov maps (S,ϕ) (on either closed surfaces or surfaces with boundary) such that $A(S,\phi)\neq\mathbb{Q}$, which

answers McMullen's question. Moreover, it also shows that a pseudo-Anosov map with irrational invariant appears as a general phenomenon.

12.2 Explicit examples of irrational minimal points

In this section, we will give some explicit pseudo-Anosov maps (S, ϕ) with $A(S, \phi) \neq \mathbb{Q}$.

12.2.1 An explicit example and its closed orbits

In this subsection, we will study an explicit example. For this example, all the possible homology classes can be realized by primitive closed orbits. In the next subsection, we will study some simple drilling classes and branched covering classes for this example, and introduce an alternative method of showing irrationality.

Let $\phi = T_{a_3} \cdot T_{b_2}^{-1} \cdot T_{b_1}^{-1} \cdot T_{a_2} \cdot T_{a_1}$ be a surface automorphism on the surface S with two families of simple closed curves $\{a_i\}$, $\{b_j\}$ as shown in Figure 14. By Theorem 11.1.1, T is a pseudo-Anosov map. Since S is the closed genus 2 surface, $A(S, \phi) = \mathbb{Q}$ by Corollary 10.2.3. Although (S, ϕ) itself is not an object we are interested in, we will apply our drilling and branched covering construction to it.

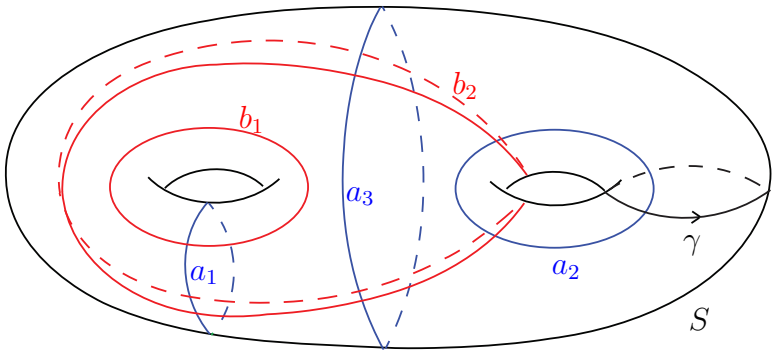

Figure 14

Let $N = M(S, \phi)$ be the mapping torus with $p : N \to S^1$ giving the fibered stucture. It is easy to check that $H_1(N; \mathbb{Z}) = \mathbb{Z}^2 = \mathbb{Z}[u] \oplus \mathbb{Z}[t]$, here $p_*(u)$ generates $H_1(S^1; \mathbb{Z})$ and $u \cap [S] = 1$, while t is presented by the curve γ in Figure 14.

We can cut the surface S along curves a, b, c, d in Figure 15 (a) to get an octagon representation of S as in Figure 15 (b). The twisting curves a_i, b_j are also shown in Figure 15 (b). The oriented curve d is homologous to γ in Figure 14, thus presents the homology class t.

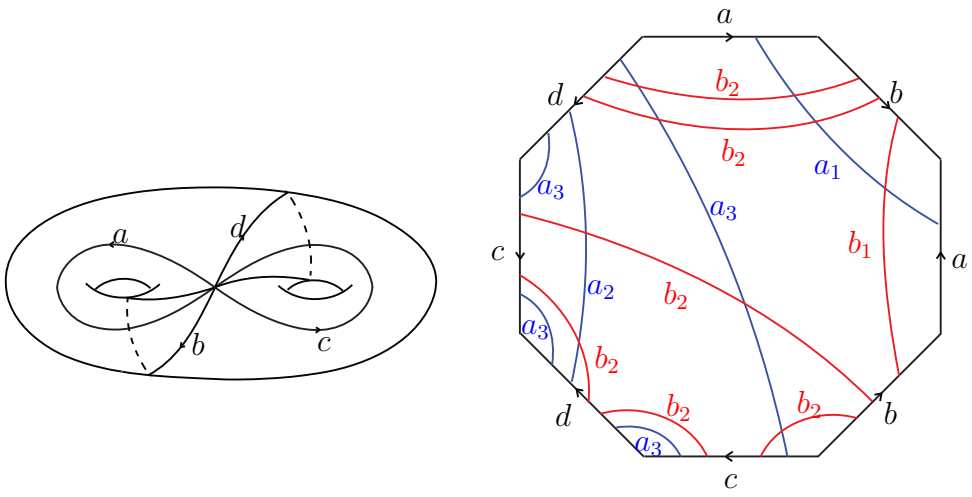

Figure 15

By running Bestvina-Handel's algorithm in [6], we get a graph $G \subset S$ in Figure 16 (a), which is the spine of a *fibered surface* carrying ϕ, such that the induced map $\hat{\phi} : G \to G$ is *efficient* (see [6] for terminologies show up here). We also get a train track τ carrying the stable lamination of ϕ, which is shown in Figure 16 (b).

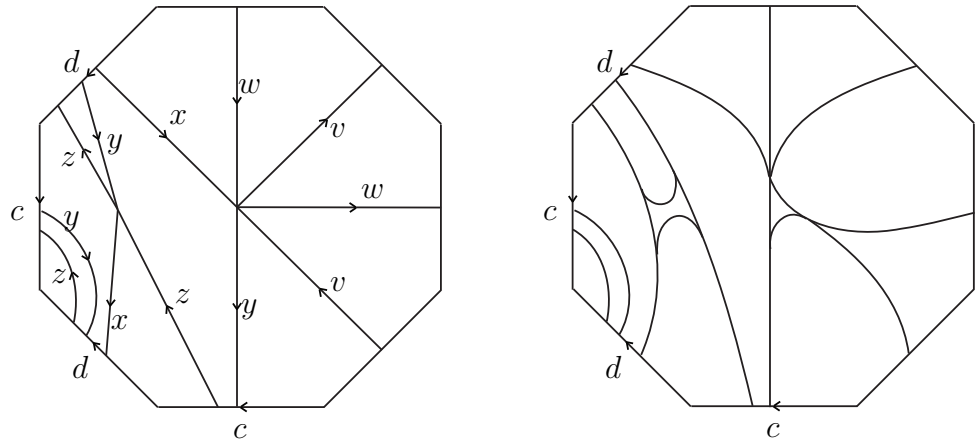

Figure 16

Moreover, we can thicken each edge of G to get a Markov partition of ϕ as in [6].

Let $\bar{a}$ be the inverse of an oriented edge a, then the induced map $\hat{\phi} : G \to G$ is given as the following:

$$\begin{cases} v \to vy\bar{z}\bar{y}\bar{x}zxyzxyz\bar{y}\bar{x}\bar{z}xyz\bar{y}\bar{v}y\bar{z}\bar{y}\bar{x}\bar{z}\bar{y}\bar{x}\bar{z}xyz\bar{y}vy\bar{z}\bar{y}\bar{x}zxy\bar{z}\bar{y}\bar{x}\bar{z}\bar{y}\bar{x}\bar{z}xyz\bar{y}\bar{v}y\bar{z}\bar{y}\bar{x}zxyzxyz\bar{y}\bar{w}v^2, \\ w \to \bar{v}wy\bar{z}\bar{y}\bar{x}\bar{z}\bar{y}\bar{x}\bar{z}xyz\bar{y}vy\bar{z}\bar{y}\bar{x}zxyzxyz\bar{y}\bar{x}\bar{z}xyz\bar{y}\bar{v}y\bar{z}\bar{y}\bar{x}zxyzxyz\bar{y}vy\bar{z}\bar{y}\bar{x}zxy\bar{z}\bar{y}\bar{x}\bar{z}\bar{y}\bar{x}\bar{z}xyz\bar{y}\bar{v}, \\ x \to xyz\bar{y}vy\bar{z}\bar{y}\bar{x}zxy\bar{z}\bar{y}\bar{x}\bar{z}\bar{y}\bar{x}\bar{z}xyz\bar{y}\bar{v}, \\ y \to y\bar{z}\bar{y}\bar{x}zxyzxyz\bar{y}\bar{x}\bar{z}xyz\bar{y}\bar{v}y\bar{z}\bar{y}\bar{x}\bar{z}\bar{y}\bar{x}\bar{z}xyz\bar{y}vy\bar{z}\bar{y}\bar{x}zxy, \\ z \to zxyz. \end{cases}$$

Let $\widetilde{S}$ be one component of the lift of S in the maximal abelian cover $\widetilde{M}$, and $\widetilde{\phi}$ be the lifting of ϕ on $\widetilde{S}$. Since $H_1(N;\mathbb{Z}) = \mathbb{Z}[u] \oplus \mathbb{Z}[t]$ (here $t = [d]$), $\widetilde{S}$ is obtained by cutting S along c, then pasting $\mathbb{Z}$-copies together. Let $\widetilde{G}$ be the preimage of G in $\widetilde{S}$, then an abstract picture of $\widetilde{G}$ is shown in Figure 17.

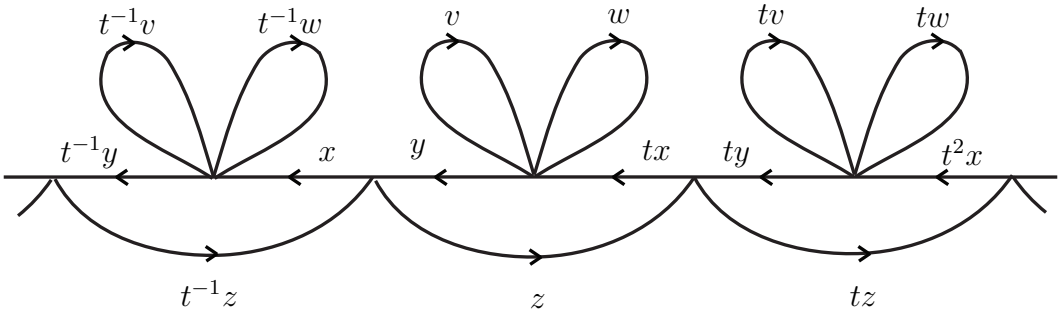

Figure 17

Since we do not need to keep track the path of $\hat{\widetilde{\phi}} : \widetilde{G} \to \widetilde{G}$ in the following work, we will write the formula of $\hat{\widetilde{\phi}}$ in the addition form, but not as a composition of paths. We will also omit the orientation of paths. By using the formula of $\hat{\phi}$ and Figure 17, we get the following transition matrix for $\hat{\widetilde{\phi}} : \widetilde{G} \to \widetilde{G}$. Let $x_1, \cdots, x_5$ be v, w, x, y, z respectively, then the entry $m_{i,j}$ in the following matrix is the sum of edges in $\mathbb{Z}[t](\hat{\widetilde{\phi}}(x_j))$ collapsing to x_i.

$$M(t) = \begin{pmatrix} t+4+t^{-1} & t+3+t^{-1} & t+1 & 1+t^{-1} & 0 \\ 1 & 1 & 0 & 0 & 0 \\ 2t+7+6t^{-1}+t^{-2} & 2t+7+6t^{-1}+t^{-2} & t+4+t^{-1} & 3+6t^{-1}+t^{-2} & t^{-1} \\ 2t^2+9t+10+3t^{-1} & 2t^2+9t+10+3t^{-1} & t^2+5t+3 & 3t+9+3t^{-1} & 1 \\ 2t^2+9t+8+t^{-1} & 2t^2+9t+8+t^{-1} & t^2+5t+1 & 3t+8+t^{-1} & 2 \end{pmatrix}.$$

In Figure 16 (b), for the invariant train track τ, there are seven switches and seven branches other than v, w, x, y, z, and ϕ (also $\widetilde{\phi}$) fixes all of them. So the contribution of the seven switches to $det(uI - P_V(t))$ cancels the contribution of the seven branches to $det(uI - P_E(t))$. Then we have $\Theta_F(u,t) = \frac{det(uI-P_E(t))}{det(uI-P_V(t))} = det(uI - M(t))$. By computing the characteristic polynomial of $M(t)$, up to a unit in $\mathbb{Z}[H_1(N;\mathbb{Z})/Tor]$,

we get:

$$\Theta_F(u,t) = (u-1)(u^2-(5t+19+5t^{-1})u+(14t+48+14t^{-1})-(5t+19+5t^{-1})u^{-1}+u^{-2}). \tag{12.1}$$

Let (α_1, α_2) be a basis of $H^1(N, \mathbb{R})$ dual with (u, t), we have $\alpha_1 = [S]$. Then by Theorem 9.0.7 and formula (12.1), we have that $C = \mathbb{R}_+ \cdot F = \mathbb{R}_+ \cdot D = \{x_1\alpha_1 + x_2\alpha_2 |\ x_1 > |x_2|\}$. For any closed orbit c of the suspension flow of $N = M(S, \phi)$, we have that for any $\alpha \in C$, $\langle \alpha, c\rangle > 0$. So $c = au + bt$ with $a \in \mathbb{Z}_+, b \in \mathbb{Z}$ and $a \geq |b|$. Then the following proposition claims that all the possible homology classes can be realized by primitive closed orbits.

Proposition 12.2.1. *For any homology class $au + bt$ with $a \in \mathbb{Z}_+, b \in \mathbb{Z}$ and $a \geq |b|$, there exists a primitive closed orbit c in $N = M(S, \phi)$, such that $[c] = au + bv$.*

Proof. The transition matrix $M(t)$ also gives the transition matrix of the Markov partition $\cup_{i=1}^{5}\mathbb{Z}[t](\widetilde{R_i})$ induced by $\widetilde{G}$ (for $\widetilde{\phi}$). Since $m_{4,4} = 3t + 9 + 3t^{-1}$, we know that $\widetilde{\phi}^{-1}(\widetilde{R_4}) \cap \widetilde{R_4}$ has nine components, while $\widetilde{\phi}^{-1}(\widetilde{R_4}) \cap t \cdot \widetilde{R_4}$ and $\widetilde{\phi}^{-1}(\widetilde{R_4}) \cap t^{-1} \cdot \widetilde{R_4}$ both have three components.

For any homology class $au + bt$ with $b \neq 0$ and $a \neq |b|$, let's suppose $b > 0$, then we can take $x \in R_4$, with lifting $\widetilde{x} \in \widetilde{R_4}$, such that:

1) $\widetilde{\phi}^i(\widetilde{x}) \in t^i \cdot \widetilde{R_4}$ for $0 \leq i \leq b$,

2) $\widetilde{\phi}^j(\widetilde{x}) \in t^b \cdot \widetilde{R_4}$ for $b < j \leq a$,

3) $\widetilde{\phi}^a(\widetilde{x}) = t^b \cdot \widetilde{x}$.

By 3), x is a period point with a primitive closed orbit c passing through it with $kc = au + bt$ for some $k \in \mathbb{Z}_+$. Actually, the period of x is a. Otherwise, by 1) and 2), either $\widetilde{\phi}^a(\widetilde{x}) = \widetilde{x}$ or $\widetilde{\phi}^a(\widetilde{x}) = t^a \cdot \widetilde{x}$, contradicts with $b \neq 0$ and $a \neq |b|$. So $k = 1$.

Then we need only to deal with the homology classes au, $au + at$ and $au - at$. Since the proof of these three cases are similar, we will only prove the $au + at$ case.

Since $\widetilde{\phi}^{-1}(t \cdot \widetilde{R_4}) \cap \widetilde{R_4}$ has three components, we denote them by S_1, S_2, S_3. Then there exists $\widetilde{x} \in S_1$, such that:

1) $\widetilde{\phi}(\widetilde{x}) \in t \cdot S_2$,

2) $\widetilde{\phi}^i(\widetilde{x}) \in t^i \cdot S_1$ for $1 < i \leq a$,

3) $\widetilde{\phi}^a(\widetilde{x}) = t^a \cdot \widetilde{x}$.

By the same argument as above, x has period a and the primitive closed orbit passing through x has homology class $au + at$. □

Since α_1 is presented by a fiber surface S, we have $\|\alpha_1\| = 2$. Since S is the closed surface with genus 2, by Corollary 10.2.3, $N = M(S, \phi)$ admits an involution $\bar{\tau}$ with $\bar{\tau}_*(u) = u$, $\bar{\tau}_*(t) = -t$. So $\bar{\tau}^*(\alpha_1) = \alpha_1$, $\bar{\tau}^*(\alpha_2) = -\alpha_2$. It implies that $\|\alpha_1 + t\alpha_2\| = \|\alpha_1 - t\alpha_2\|$ for any $t \in \mathbb{R}$. Since $\alpha_1 + t\alpha_2$ lies in the interior of the fibered cone C for any $t \in (-1, 1)$, $\|\alpha_1 + t\alpha_2\| = 2$ for $t \in (-1, 1)$. Thus the corresponding open fibered face $F = \{\frac{1}{2}\alpha_1 + t\alpha_2 |\ t \in (-\frac{1}{2}, \frac{1}{2})\}$, and the dual of this fibered face is $x = 2u \in H_1(N, \mathbb{Z})$.

12.2.2 An alternative method to deduce irrationality

Although the Drilling Theorem (Theorem 12.1.2), the Branched Covering Theorem (Theorem 12.1.4) and Lemma 12.1.5 show us there are infinitely many pseudo-Anosov maps (on closed surfaces or surfaces with boundary) satisfying $A(S, \phi) \neq \mathbb{Q}$, we do not know for which homology class c, $A(S_c, \phi_c) \neq \mathbb{Q}$ holds. The constants D and D' in the proof of both these theorems are very large, and it is difficult to find which drilling classes (branched covering classes) are the exceptional classes.

We will use an alternative method to show that certain drilling (branched covering) classes have irrational invariants. Assuming the minimal point is rational, we first use the algebraic number theory to bound the denominator of some function of the coordinates of the minimal point. On the other hand, we can compute the function numerically and show that it can not be a rational number with denominator smaller

the given bound. Since we use numerical methods here, it only gives a case-by-case argument and provides some special examples, but may not help us to understand the invariant deeper.

We will still work on the example constructed in the previous subsection and we use all the notations therein.

Let's first deal with the drilling case, choose the simplest possible drilling class $c = u + t$, then the corresponding $F_c = \{\alpha \in C |\ \langle \alpha, c + x\rangle = 1\} = \{a\alpha_1 + b\alpha_2 |\ a > |b|, 3a + b = 1\}$. Let the minimal point $m_{F_c} = s\alpha_1 + (1 - 3s)\alpha_2$ $(s \in (1/4, 1/2))$, and let $\lambda = \lambda(m_{F_c})$. We plug in the formula (12.1), omit the $u - 1$ factor, and take derivative as in Proposition 10.3.2, then get the following equation:

$$\begin{cases} \lambda^{2s} - 5\lambda^{1-2s} - 19\lambda^{s} - 5\lambda^{4s-1} + 14\lambda^{1-3s} + 48 + 14\lambda^{3s-1} - 5\lambda^{1-4s} - 19\lambda^{-s} - 5\lambda^{2s-1} + \lambda^{-2s} = 0, \\ 2\lambda^{2s} + 10\lambda^{1-2s} - 19\lambda^{s} - 20\lambda^{4s-1} - 42\lambda^{1-3s} + 42\lambda^{3s-1} + 20\lambda^{1-4s} + 19\lambda^{-s} - 10\lambda^{2s-1} - 2\lambda^{-2s} = 0. \end{cases} \tag{12.2}$$

Let $\lambda = X, \lambda^s = Y$, then we have:

$$\begin{cases} -(5Y^{-2} - 14Y^{-3} + 5Y^{-4})X + (Y^2 - 19Y + 48 - 19Y^{-1} + Y^{-2}) - (5Y^4 - 14Y^3 + 5Y^2)X^{-1} = 0, \\ (10Y^{-2} - 42Y^{-3} + 20Y^{-4})X + (2Y^2 - 19Y + 19Y^{-1} - 2Y^{-2}) + (-20Y^4 + 42Y^3 - 10Y^2)X^{-1} = 0. \end{cases} \tag{12.3}$$

By solving the first quadratic equation of (12.3), we get: $X =$

$$\frac{(Y^2 - 19Y + 48 - 19Y^{-1} + Y^{-2}) \pm \sqrt{(Y^2 - 9Y + 20 - 9Y^{-1} + Y^{-2})(Y^2 - 29Y + 76 - 29Y^{-1} + Y^{-2})}}{10Y^{-2} - 28Y^{-3} + 10Y^{-4}}. \tag{12.4}$$

By plugging in formula (12.4) into the second equation of (12.3), let $A = Y + Y^{-1}$ and simplify the equation, we get:

$$\begin{aligned} 0 = & f(A) \\ = & 200A^6 - 9530A^5 + 128025A^4 - 778216A^3 + 2422552A^2 - 3782016A + 2354832 \\ = & (15A - 42)^2(A^2 - 9A + 18)(A^2 - 29A + 74) - (A^2 - 4)(5A^2 - 28A + 36)^2. \end{aligned} \tag{12.5}$$

Now A is a positive real root of equation (12.5), with

$$Y = \frac{A + \sqrt{A^2 - 4}}{2}, \tag{12.6}$$

and

$$\begin{aligned} XY^{-3} = & \frac{(A^2 - 19A + 46) \pm \sqrt{(A^2 - 9A + 18)(A^2 - 29A + 74)}}{10A - 28} \\ = & \frac{3(5A - 14)(A^2 - 19A + 46) \pm (5A^2 - 28A + 36)\sqrt{A^2 - 4}}{6(5A - 14)^2}. \end{aligned} \tag{12.7}$$

So X, Y lie in a number field $\mathbb{F}$ with $[\mathbb{F} : \mathbb{Q}(A)] \leq 2$. Since A is the root of a degree-6 polynomial $f(x)$ in equation (12.5), and we can check that $f(x)$ is irreducible modulus 7 by Mathematica ([18]), we have $[\mathbb{Q}(A) : \mathbb{Q}] = 6$. So $[\mathbb{F} : \mathbb{Q}] = 6$ or 12.

Since $A = Y + Y^{-1}$, the minimal polynomial $p(x)$ of Y is a factor of $x^6 \cdot f(x + x^{-1})$, so either $p(x) = \pm x^{\deg(p)} p(x^{-1})$, or $p(x)p(x^{-1}) |\, x^6 \cdot f(x + x^{-1})$. Since $f(x)$ is irreducible, we have either $p(x) = x^6 \cdot f(x + x^{-1})$, or $p(x)p(x^{-1}) = x^6 \cdot f(x + x^{-1})$. Both of these cases imply that Y is not an algebraic unit since the first or last term of $f(x)$ has coefficient greater than 1. Moreover, by equation (12.5) and $A = Y + Y^{-1}$, we know that both $200Y$ and $200Y^{-1}$ are algebraic integers.

The definitions in algebraic number theory that will appear in the following a few paragraphs can be found in [29] Chapter 0.

Let $\mathcal{O}_{\mathbb{F}}$ be the ring of algebraic integers of the number field $\mathbb{F}$, then $Y\mathcal{O}_{\mathbb{F}} \subset \mathbb{F}$ is a *fractional ideal* of the Dedekind domain $\mathcal{O}_{\mathbb{F}}$. By [29] Theorem 0.3.4, $Y\mathcal{O}_{\mathbb{F}}$ can be decomposed as product of prime ideals of $\mathcal{O}_{\mathbb{F}}$ and their inversions. Let the decomposition be $Y\mathcal{O}_{\mathbb{F}} = \mathcal{P}_1^{p_1} \cdots \mathcal{P}_m^{p_m} \cdot \mathcal{Q}_1^{-q_1} \cdots \mathcal{Q}_n^{-q_n}$, here $p_i, q_j \in \mathbb{Z}_+$, $\mathcal{P}_i$ and $\mathcal{Q}_j$ are prime ideals of $\mathcal{O}_{\mathbb{F}}$. This decomposition is nontrivial since Y is not an algebraic unit.

Let $200\mathcal{O}_{\mathbb{F}} = (2\mathcal{O}_{\mathbb{F}})^3(5\mathcal{O}_{\mathbb{F}})^2 = (\mathcal{P}_1^2)^{3a_1} \cdots (\mathcal{P}_m^2)^{3a_m} \cdot (\mathcal{P}_1^5)^{2b_1} \cdots (\mathcal{P}_n^5)^{2b_n}$. Since $[\mathbb{F} : \mathbb{Q}] \leq 12$, we have $a_i, b_j \leq 12$. Since $200Y \in \mathcal{O}_{\mathbb{F}}$, we have that $\mathcal{Q}_j \in \{\mathcal{P}_1^2, \cdots, \mathcal{P}_m^2, \mathcal{P}_1^5, \cdots, \mathcal{P}_n^5\}$ and $0 < q_j \leq 36$. Since $200Y^{-1} \in \mathcal{O}_{\mathbb{F}}$, we also have $0 < p_i \leq 36$.

If $su+(1-s)t$ is a rational class with $s = \frac{q}{p}$ and $gcd(p, q) = 1$, then $X = Y^{\frac{1}{s}} = Y^{\frac{p}{q}}$. So $X\mathcal{O}_{\mathbb{F}} = \mathcal{P}_1^{\frac{pp_1}{q}} \cdots \mathcal{P}_m^{\frac{pp_m}{q}} \cdot \mathcal{Q}_1^{-\frac{pq_1}{q}} \cdots \mathcal{Q}_n^{-\frac{pq_n}{q}}$, which implies $q \leq 36$. To show that $A(S_c, \phi_c) \neq \mathbb{Q}$, we need only to compute $\frac{\log X}{\log Y}$ numerically, and check that it is not a rational number with denominator less or equal to 36.

Solving equation (12.5) by Mathematica ([18]), we get $A = 30.38934206615629\ldots$. By plugging in the value of A into equation (12.6) and (12.7), we get $Y = 30.35640008366680\ldots$, and $X = 11506.21849\ldots$. So $\frac{\log X}{\log Y} = 2.739707\ldots$. It is easy to check that $\frac{\log X}{\log Y}$ can't be a rational number with denominator ≤ 36. So for $c = u+t$, $A(S_c, \phi_c) \neq \mathbb{Q}$. Here the minimal point of $\lambda(\cdot)$ on $F_c = \{\alpha \in C | \ \langle \alpha, c + x\rangle = 1\}$ is $su + (1 - 3s)t$ with $s = \frac{\log Y}{\log X} = 0.365002\ldots$.

Now we take primitive classes $\beta_n = n\alpha_1 - (n-1)\alpha_2 \in C$ with $n \in \mathbb{Z}_+$. Since $\langle \beta_n, u+t\rangle = 1$, the corresponding fiber surface S_n in $N_c = M(S_c, \phi_c)$ has one boundary component. On the other hand $-\chi(S_n) = \langle \beta_n, x + c\rangle = \langle n\alpha_1 - (n-1)\alpha_2, 3u + t\rangle = 2n + 1$, so S_n is the genus $n + 1$ surface with one boundary component. Then we get the following theorem.

Theorem 12.2.2. *For any genus g surface S with one boundary component and $g \geq 2$, there exists a pseudo-Anosov map ϕ on S, such that $A(S, \phi) \neq \mathbb{Q}$.*

Now let's turn to the branched covering construction. Since branched covering classes have nonprimitive homology classes, the simplest choice is $c' = 2u + 2t$, and $d(c')x + (d(c') - 1)c' = 6u + 2t$. Since $d(c')x + (d(c') - 1)c' = 6u + 2t$ is linear dependent with $c + x = 3u + t$ in the previous example, we know that $F^{c'} = \frac{1}{2}F_c$, thus $m_{F^{c'}} = \frac{1}{2}m_{F_c}$. So $A(S^{c'}, \phi^{c'}) = A(S_c, \phi_c) \neq \mathbb{Q}$.

Let $\beta_n = n\alpha_1 - (n-1)\alpha_2$ with $n \in \mathbb{Z}_+$, the corresponding surface S'_n in $N^{c'} = M(S^{c'}, \phi^{c'})$ satisfies $-\chi(S'_n) = \langle \beta_n, d(c')x + (d(c') - 1)c' \rangle = \langle n\alpha_1 - (n-1)\alpha_2, 6u + 2t \rangle = 4n + 2$. So S'_n is the closed surface with genus $2n + 2$, which has $A(S'_n, \phi'_n) \neq \mathbb{Q}$.

Theorem 12.2.3. *For any closed genus $2n$ surface S with $n \geq 2$, there exists a pseudo-Anosov map ϕ on S, such that $A(S, \phi) \neq \mathbb{Q}$.*

Remark 12.2.4. *Since there does not exist a genuine branched cover from $\Sigma_{3,0}$ to $\Sigma_{2,0}$, we can not produce a pseudo-Anosov map ϕ on $\Sigma_{3,0}$ with $A(\Sigma_{3,0}, \phi) \neq \mathbb{Q}$ from the example in this subsection. We will construct another example in the next section and show a similar result of Theorem 12.2.3 for closed surfaces with odd genus.*

12.2.3 An irrational example from Penner's construction

Now we give an example which shows that if the Dehn-twists on a-curves and b-curves are not proportional as in Proposition 11.2.1, then the minimal point m_F may not be rational.

Let the surface S and two families of curves $\{a_1, a_2, a_3\}$ and $\{b_1, b_2\}$ be as shown in Figure 18. Since the b-curves are quite complicated, we draw b_1 as a red curve and b_2 as a pink curve.

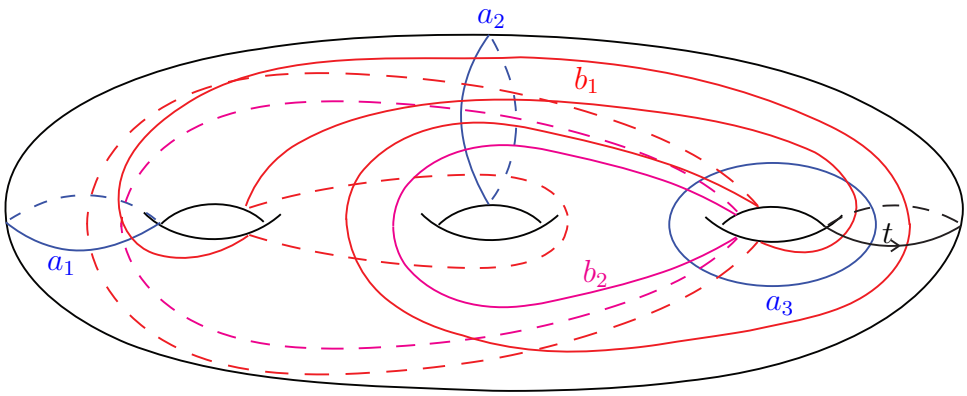

Figure 18

Let's take the pseudo-Anosov map $\phi = T_a^{(1,1,1)} \cdot T_b^{(-1,-1)} \cdot T_a^{(2,1,2)} \cdot T_b^{(-2,-1)} \in \mathcal{D}(a^+, b^-)$, for which the Dehn-twists along a-curves and b-curves are not proportional.

We can check that ϕ is generic. For the mapping torus $N = M(S, \phi)$, $H_1(N;\mathbb{Z})/Tor = \mathbb{Z}[u] \oplus \mathbb{Z}[t]$. Here u is given by Lemma 11.1.3 and t is as shown in Figure 18.

Let $\widetilde{N}$ be the maximal free abelian cover of N, and $\widetilde{S}$ be one component of the preimage of S. For the preimage of a-curves and b-curves in $\widetilde{S}$, we can get the intersection graph G, which is shown in Figure 19.

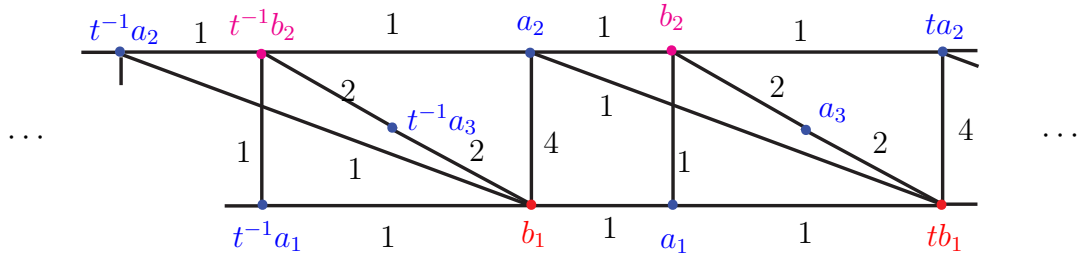

Figure 19

From Figure 19, we can get the intersection matrix: $M(t) = \begin{pmatrix} t+1 & 1 \\ t+4 & 1+t^{-1} \\ 2t & 2 \end{pmatrix}$.

By Proposition 11.1.7 and direct computation, we get

$$\begin{aligned}\frac{\Phi(u,t)}{(u-1)^{14-5}} =& det(uI - M_{(2,1)}M^{(2,1,2)}M_{(1,1)}M^{(1,1,1)}) \\ =&(u-1)\cdot(u^4-(78t^2+785t+1929+779t^{-1}+77t^{-2})u^3 \\ &+(25t^2+2673t+21326+2673t^{-1}+25t^{-2})u^2 \\ &-(77t^2+779t+1929+785t^{-1}+78t^{-2})u+1).\end{aligned} \tag{12.8}$$

For this example, $\Phi(u,t) \neq \Phi(u,t^{-1})$, so the dilatation function is not symmetric as in Proposition 11.2.1. Let (α_1, α_2) be a basis of $H^1(N;\mathbb{Z})$ dual with (u,t). Then by Theorem 9.0.7, Lemma 11.1.3 and the formula of $\Phi(u,t)$ above, we get the fibered face $F = \{\frac{1}{4}\alpha_1 + s\alpha_2 |\ s \in (-1/8, 1/8)\}$.

Let the minimal point $m_F = \frac{1}{4}\alpha_1 + s\alpha_2$, by solving the equations numerically by Mathematica ([18]), we have $s = 0.0001117568645\ldots$, while $\frac{1}{4s} = 2236.999051\ldots$. However, by the algebraic number theory method as in Section 12.2.2, if $\frac{1}{4s}$ is a rational number, its denominator must be less or equal to 40, which is impossible. So $A(S,\phi) \neq \mathbb{Q}$ here.

Now let's take the cohomology class $n\alpha_1 + \alpha_2$ with $n \geq 3$, $n\alpha_1 + \alpha_2$ lies in the fibered cone C. While $\|n\alpha_1 + \alpha_2\| = 4n$, which is represented by a closed surface with genus $2n+1$ with $n \geq 3$.

On the other hand, for the example (S,ϕ) we constructed in this subsection, S has a double cover S' associated to the kernel of $\theta : H_1(S;\mathbb{Z}) \to \mathbb{Z}_2$. Here θ is defined by $\theta([t]) = \bar{1}$ while $\theta(a_i) = \theta(b_j) = \bar{0}$. It is easy to check that ϕ lifts to $\phi' : S' \to S'$. Since S' has genus 5 and $A(S,\phi)$ is invariant under taking finite cover (Proposition 10.1.2), we get a genus 5 example with $A(S,\phi) \neq \mathbb{Q}$.

So we have the following theorem which is similar to Theorem 12.2.3.

Theorem 12.2.5. *For any closed genus $2n+1$ surface S with $n \geq 1$, there exists a pseudo-Anosov map ϕ on S, such that $A(S,\phi) \neq \mathbb{Q}$.*

With Theorem 12.2.2, 12.2.3 and 12.2.5 together, we get Theorem 8.2.1 in the introduction.

12.3 Various other examples with irrational minimal points

In this section, we will give various other examples with irrational minimal points, which clarifies some understanding of our invariant.

12.3.1 Other examples

Proposition 10.2.3 implies that, for surfaces $\Sigma_{0,4}$, $\Sigma_{1,2}$ and $\Sigma_{2,0}$, $A(S,\phi) = \mathbb{Q}$ always holds for any pseudo-Anosov map ϕ. However, Theorem 8.2.1 tells us there exist pseudo-Anosov maps ϕ on any possible closed and one punctured surfaces, such that $A(S,\phi) \neq \mathbb{Q}$. The remaining "small" surfaces are $\Sigma_{0,5}$ and $\Sigma_{1,3}$, both of them have Euler characteristic -3.

In this subsection, we will give two pseudo-Anosov maps on $\Sigma_{0,5}$ and $\Sigma_{1,3}$, with $A(S,\phi) \neq \mathbb{Q}$. The method of showing irrationality is same with the method in Section 12.2.2. Since the computation is routine and tedious, we will not give the proof here.

The example for $\Sigma_{1,3}$ is given by twists along two families of filling curves $\{a_1, a_2\}, \{b_1, b_2\}$ in Figure 20 (a), here a_2 and b_1 both bound three punctured spheres. Let t_{a_2} be the left hand half Dehn-twist along a_2. t_{a_2} is a homeomorphism of the three punctured sphere, it is identity on a neighborhood of a_2 and does a π-rotation away from a bigger neighborhood of a_2 and exchanges the other two punctures. t_{b_1} is defined similarly. The pseudo-Anosov map we take is $\phi = T_{a_1} t_{a_2} t_{b_1}^{-1} T_{b_2}^{-1} T_{a_1}^2 t_{a_2} t_{b_1}^{-3} T_{b_2}^{-1}$. ϕ does not directly come from Penner's construction, since it contains half twists. However, Penner's construction of bigon track still works here. We define $\hat{\mathcal{D}}(a^+, b^-)$ to be the augmented semigroup of $\mathcal{D}(a^+, b^-)$, which also includes such half Dehn

twists, then $\phi \in \hat{\mathcal{D}}(a^+, b^-)$. This ϕ is generic, and we can still use Φ to compute the dilatation function.

The example for $\Sigma_{0,5}$ is a pseudo-Anosov map ϕ given by a braid as shown in Figure 20 (b) with word $\sigma_1\sigma_3\sigma_2^{-1}$. This ϕ is generated by half Dehn-twists along two families of curves a^+ and b^-, so it lies in $\hat{\mathcal{D}}(a^+, b^-)$. However, this ϕ is not generic. We can construct the invariant train track explicitly and compute Θ_F by Theorem 9.0.3. In this example, we need to compute the Alexander Polynomial of this manifold to calculate the Thurston norm (see Theorem 1.1 of [33]).

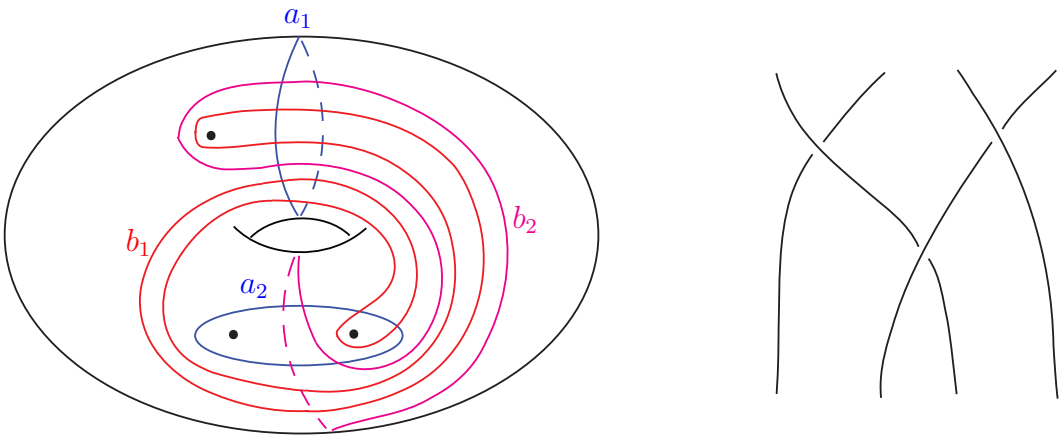

(a) (b)

Figure 20

12.3.2 $A(S, \phi)$ is not defined for 3-manifolds

We defined $A(S, \phi)$ as an invariant of pseudo-Anosov maps, and also an invariant A_C for fibered cones $C \subset H^1(N; \mathbb{R})$. So an natural question is, for different fibered cones C_1, C_2 of the same manifold N, whether $A_{C_1} = A_{C_2}$ always holds. Not surprisingly, we will give an example in this subsection to show that the above equality does not necessarily hold.

Our example comes from Dehn-filling of one of the cusps of the magic manifold N. The magic manifold is the complement of a 3-component link as in Figure 21 (a).

In [21], the dilatations of the monodromy maps of those surface bundles obtained by Dehn-filling of the magic manifold were studied. From those examples, the authors of [21] got new examples of small dilatation pseudo-Anosov maps, and estimated the asymptotic property of the minimal dilatation pseudo-Anosov maps.

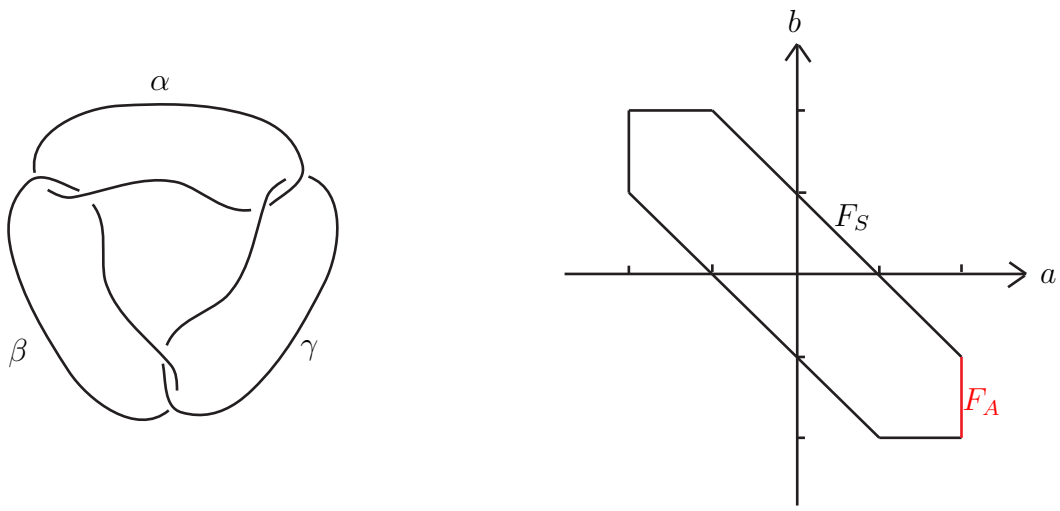

(a) (b)

Figure 21

Let F_α, F_β, F_γ be the oriented two punctured discs bounded by α, β, γ respectively, they are the obvious surfaces lying on the paper in Figure 21 (a) and their orientations point out of the paper. Then $([F_\alpha], [F_\beta], [F_\gamma])$ is a basis of $H_2(N, \partial N; \mathbb{Z}) = \mathbb{Z}^3$. An element $x[F_\alpha] + y[F_\beta] + x[F_\gamma] \in H_2(N, \partial N; \mathbb{Z}) \cong H^1(N; \mathbb{Z})$ is written as (x, y, z), by its coordinate.

In Section 2 of [21], the topological property of Dehn-fillings on the β curve is studied. Let's take the $-\frac{7}{2}$ Dehn-filling of β curve, the resulted manifold is denoted by $N(-\frac{7}{2})$. Here the $-\frac{7}{2}$ slope is given by the intersection of $(7, 2, 0) \in H_2(N, \partial N; \mathbb{Z})$ with the boundary torus of $N(\beta)$. Then by Lemma 2.15 of [21], $a = (4, 2, 3)$ and $b = (3, 2, 4) \in H_2(N, \partial N; \mathbb{Z})$ give a basis of $H_2(N(-\frac{7}{2}), \partial N(-\frac{7}{2}); \mathbb{Z})$, which will still be denoted by a and b.

By Lemma 2.16 of [21], the Thurston norm ball of $H_2(N(-\frac{7}{2}), \partial N(-\frac{7}{2}); \mathbb{Z})$ with norm 4 is a hexagon shown as in Figure 21 (b), with vertices $\pm(2,-1)$, $\pm(1,-2)$, $\pm(2,-2)$. All the faces of the hexagon in Figure 21 (b) are fibered faces. The face F_S is an *s-face* (symmetric face) as the definition in section 2.5.2 of [21]. By Remark 3.3 of [21], the minimal point of the restriction of $\lambda(\cdot)$ on F_S is the middle point of F_S, which is rational. Let C_S be the fibered cone associate with F_S, then $A_{C_S} = \mathbb{Q}$.

Now let's turn to think about the face F_A as shown in Figure 21 (b), the two boundary points of F_A is $(2,-1)$ and $(2,-2)$. These two points correspond with $(5,2,2)$ and $(2,0,-2)$ in $H^1(N;\mathbb{Z})$. By [22], the fibered cone C of the magic manifold N containing $(5,2,2)$ and $(2,0,-2)$ on the boundary has its Teichmüller polynomial $\Theta = xyz^{-1} - x - y - xz^{-1} - yz^{-1} + 1$, here (x,y,z) is a basis of $H_1(N;\mathbb{Z})$ dual with $([F_\alpha],[F_\beta],[F_\gamma])$.

Let the minimal point be $m_F = t(2,-1) + (1-t)(2,-2) \in H^1(N(-\frac{7}{2});\mathbb{Z})$, which is equal to $(2+3t, 2t, 4t-2) \in H^1(N;\mathbb{Z})$. So $\lambda(m_F)$ is the greatest root of $0 = X^{t+4} - X^{3t+2} - X^{2t} - X^{-t+4} - X^{-2t+2} + 1$. By numerical computation of the minimal point by Mathematica ([18]), we get $t = 0.528944\ldots$, while $2/t = 3.781116\ldots$. By the algebraic number theory method, we get that, if $2/t$ is a rational number, the denominator is smaller or equal to 16. But the numerical data implies the it is impossible, so $A_{C_A} \neq \mathbb{Q}$.

In Section 2.5.2 of [21], it is shown that all the A-faces of $N(r)$ are *entropy equivalent*. So for $N(-\frac{7}{2})$, one pair of fibered faces have $A_C = \mathbb{Q}$, while two other pairs have $A_C \neq \mathbb{Q}$ and these two pairs share the same invariant. So our invariant A_C is not defined for the whole manifold, but only for each fibered cone.

Remark 12.3.1. *In Lemma 3.5, the authors of [21] have shown that all the fibered faces of $N(-\frac{5}{2})$ have rational minimal point. So we take $N(-\frac{7}{2})$ here, which is the closest example to $N(-\frac{5}{2})$.*

In the proof of Lemma 3.6, the authors of [21] tried to find the minimal point of the A-face of $N(-\frac{2}{3})$ with computing $\lambda(\cdot)$ for some "very large" homology classes. It seems that they have realized the minimal point there may not be rational, but did not find a proper algebraic tool to prove it.

Chapter 13

Further questions

1. Although $A(S,\phi) \neq \mathbb{Q}$ seems to be a general phenomenon, it is still quite mysterious what does this inequality mean. All of our proofs either do not give explicit examples, or require numerical computation to deduce the irrationality. These two processes both do not help us much to understand the meaning of the irrationality. A more sophisticated method to determine whether $A(S,\phi) = \mathbb{Q}$ will help us to understand the question much deeper. For all the examples we give here, the rationality of the minimal point is given symmetry, i.e. the rational minimal point m_F is the unique fixed point of a nice group action (mostly $\mathbb{Z}_2$) on the fibered face F. So another question is: whether a rational m_F implies any kind of symmetry?

2. Theorem 8.2.1 tells us, for all closed or one punctured surfaces with $|\chi(S)| \geq 3$, there exist a pseudo-Anosov ϕ on S with $A(S,\phi) \neq \mathbb{Q}$. By the evident of the drilling Theorem (Theorem 12.1.2) and our numerical experiments, it is natural to guess that the same result holds for all surfaces with $|\chi(S)| \geq 3$. However, even if one single example of $A(S,\phi) \neq \mathbb{Q}$ gives us a family of such examples, we still do not have enough examples to show that $A(S,\phi)$ can be irrational for all surfaces with $|\chi(S)| \geq 3$.

3. The Drilling Theorem (Branched Covering Theorem) implies that drilling (branched covering) deduce irrationality for all but finitely many drilling (branched

covering) classes. However, from the proof of these two theorems, the number of "exceptional" drilling classes is very large and depends on the Teichmüller polynomial numerically. The author would like to know, whether there is any effective bound which only depends on the surface S and its dilatation λ, or even whether there is a universal bound.

4. In all of our examples, the $\mathbb{Q}$-rank of $A(S,\phi)$ is either one or two. The author does not have an example with higher rank $A(S,\phi)$ yet. So we can ask that whether $A(S,\phi)$ can be arbitrarily large? The author tends to believe that one can do drilling construction on surface bundles with large b_1 to get $A(S,\phi)$ with large rank. The rank of $A(S,\phi)$ also provides a simple invariant up to fibered cone commensurability, e.g. if $A(S,\phi)$ has large rank, then (S,ϕ) is not fibered cone commensurable with (S',ϕ') if the Euler characteristic of S' is small.

5. Since the Virtually Fibered Conjecture holds (see [46], [3]), every hyperbolic 3-manifold with finite volume has a finite cover which is a surface bundle over circle. So for any commensurability class $\mathcal{C}$ of hyperbolic 3-manifolds, the invariant A_C is defined for a fibered cone C of some $M \in \mathcal{C}$. Then for any such commensurability class $\mathcal{C}$, we can ask many questions. For example, for any commensurability class $\mathcal{C}$, whether there is a surface bundle over circle $M \in \mathcal{C}$, which has a fibered face C, with $A_C = \mathbb{Q}$? For each such commensurability class $\mathcal{C}$, we can also define a $\mathbb{Q}$-submodule of $\mathbb{R}$: $A_{\mathcal{C}} = \sum A_C$, here C runs over all the fibered cones of all the manifolds in the commensurability class $\mathcal{C}$. Since hyperbolic 3-manifolds have virtually RFRS (residually finite rational solvable) fundamental groups (see [2] and [3]), $\mathcal{C}$ has virtually infinite first betti number. Moreover, for a fixed manifold N, we can always find a finite cover, which has a fibered cone that does not correspond with any fibered cone of N. So $A_{\mathcal{C}} = \sum A_C$ is a sum of infinitely many terms. Then it is natural to ask, whether $A_{\mathcal{C}} \neq \mathbb{Q}$ for any commensurability class $\mathcal{C}$? Moreover, we can also ask, whether $A_{\mathcal{C}}$ is always an infinitely generated $\mathbb{Q}$-submodule of $\mathbb{R}$?

Bibliography

[1] *Travaux de Thurston sur les surfaces*, volume 66 of *Astérisque*. Société Mathématique de France, Paris, 1979. Séminaire Orsay, With an English summary.

[2] Ian Agol. Criteria for virtual fibering. *J. Topol.*, 1(2):269–284, 2008.

[3] Ian Agol. The virtual Haken conjecture. *Doc. Math.*, 18:1045–1087, 2013. With an appendix by Agol, Daniel Groves, and Jason Manning.

[4] Matthias Aschenbrenner, Stefan Friedl, and Henry Wilton. 3-manifold groups. *arXiv:math.GT/1205.0202*.

[5] Nicolas Bergeron and Akshay Venkatesh. The asymptotic growth of torsion homology for arithmetic groups. *J. Inst. Math. Jussieu*, 12(2):391–447, 2013.

[6] Mladen Bestvina and Michael Handel. Train-tracks for surface homeomorphisms. *Topology*, 34(1):109–140, 1995.

[7] David W. Boyd. Kronecker's theorem and Lehmer's problem for polynomials in several variables. *J. Number Theory*, 13(1):116–121, 1981.

[8] Danny Calegari, Hongbin Sun, and Shicheng Wang. On fibered commensurability. *Pacific J. Math.*, 250(2):287–317, 2011.

[9] Andrew J. Casson and Steven A. Bleiler. *Automorphisms of surfaces after Nielsen and Thurston*, volume 9 of *London Mathematical Society Student Texts*. Cambridge University Press, Cambridge, 1988.

[10] Marc Culler and Peter B. Shalen. Volumes of hyperbolic Haken manifolds. I. *Invent. Math.*, 118(2):285–329, 1994.

[11] Pierre Derbez, Yi Liu, and Shicheng Wang. Chern–simons theory, surface separability, and volumes of 3-manifolds. *arXiv:math.GT/1401.0073*.

[12] Benson Farb and Dan Margalit. *A primer on mapping class groups*, volume 49 of *Princeton Mathematical Series*. Princeton University Press, Princeton, NJ, 2012.

[13] N. I. Fel′dman and Yu. V. Nesterenko. Transcendental numbers. In *Number theory, IV*, volume 44 of *Encyclopaedia Math. Sci.*, pages 1–345. Springer, Berlin, 1998.

[14] David Fried. Flow equivalence, hyperbolic systems and a new zeta function for flows. *Comment. Math. Helv.*, 57(2):237–259, 1982.

[15] David Gabai. Foliations and the topology of 3-manifolds. *J. Differential Geom.*, 18(3):445–503, 1983.

[16] Frédéric Haglund and Daniel T. Wise. Special cube complexes. *Geom. Funct. Anal.*, 17(5):1551–1620, 2008.

[17] Hugh Hilden, María Lozano, José Montesinos, and Wilbur Whitten. On universal groups and three-manifolds. *Invent. Math.*, 87(3):441–456, 1987.

[18] Wolfram Research Inc. *Mathematica: Version 8*. Champaign, Illinois, 2008.

[19] Jeremy Kahn and Vladimir Markovic. The good pants homology and a proof of the ehrenpreis conjecture. *arXiv:math.GT/1101.1330*.

[20] Jeremy Kahn and Vladimir Markovic. Immersing almost geodesic surfaces in a closed hyperbolic three manifold. *Ann. of Math. (2)*, 175(3):1127–1190, 2012.

[21] Eiko Kin, Sadayoshi Kojima, and Mitsuhiko Takasawa. Minimal dilatations of pseudo-anosovs generated by the magic 3-manifold and their asymptotic behavior. *arXiv:math.GT/1104.3939*.

[22] Eiko Kin and Mitsuhiko Takasawa. Pseudo-Anosov braids with small entropy and the magic 3-manifold. *Comm. Anal. Geom.*, 19(4):705–758, 2011.

[23] Thomas Koberda. Homological eigenvalues of mapping classes and torsion homology growth for fibered 3-manifolds. *arXiv:math.GT/1205.0215*.

[24] Thang Le. Homology torsion growth and mahler measure. *arXiv:math.GT/1010.4199*.

[25] Yi Liu and Vladimir Markovic. Homology of curves and surfaces in closed hyperbolic 3-manifolds. *arXiv:math.GT/1309.7418*.

[26] Darren D. Long and Ulrich Oertel. Hyperbolic surface bundles over the circle. In *Progress in knot theory and related topics*, volume 56 of *Travaux en Cours*, pages 121–142. Hermann, Paris, 1997.

[27] Wolfgang Lück. *L^2-invariants: theory and applications to geometry and K-theory*, volume 44 of *Ergebnisse der Mathematik und ihrer Grenzgebiete. 3. Folge. A Series of Modern Surveys in Mathematics [Results in Mathematics and Related Areas. 3rd Series. A Series of Modern Surveys in Mathematics]*. Springer-Verlag, Berlin, 2002.

[28] Wolfgang Lück. Approximating L^2-invariants and homology growth. *Geom. Funct. Anal.*, 23(2):622–663, 2013.

[29] Colin Maclachlan and Alan W. Reid. *The arithmetic of hyperbolic 3-manifolds*, volume 219 of *Graduate Texts in Mathematics*. Springer-Verlag, New York, 2003.

[30] Shigenori Matsumoto. Topological entropy and Thurston's norm of atoroidal surface bundles over the circle. *J. Fac. Sci. Univ. Tokyo Sect. IA Math.*, 34(3):763–778, 1987.

[31] Curtis T. McMullen. *Renormalization and 3-manifolds which fiber over the circle*, volume 142 of *Annals of Mathematics Studies*. Princeton University Press, Princeton, NJ, 1996.

[32] Curtis T. McMullen. Polynomial invariants for fibered 3-manifolds and Teichmüller geodesics for foliations. *Ann. Sci. École Norm. Sup. (4)*, 33(4):519–560, 2000.

[33] Curtis T. McMullen. The Alexander polynomial of a 3-manifold and the Thurston norm on cohomology. *Ann. Sci. École Norm. Sup. (4)*, 35(2):153–171, 2002.

[34] Curtis T. McMullen. Entropy on riemann surfaces and jacobians of finite covers. `http://www.math.harvard.edu/~ctm/papers/index.html`, 2010.

[35] Calvin C. Moore. Exponential decay of correlation coefficients for geodesic flows. In *Group representations, ergodic theory, operator algebras, and mathematical physics (Berkeley, Calif., 1984)*, volume 6 of *Math. Sci. Res. Inst. Publ.*, pages 163–181. Springer, New York, 1987.

[36] Jean-Pierre Otal. *The hyperbolization theorem for fibered 3-manifolds*, volume 7 of *SMF/AMS Texts and Monographs*. American Mathematical Society, Providence, RI, 2001. Translated from the 1996 French original by Leslie D. Kay.

[37] Robert C. Penner. A construction of pseudo-Anosov homeomorphisms. *Trans. Amer. Math. Soc.*, 310(1):179–197, 1988.

[38] Mark Pollicott. Exponential mixing for the geodesic flow on hyperbolic three-manifolds. *J. Statist. Phys.*, 67(3-4):667–673, 1992.

[39] Peter Scott. Subgroups of surface groups are almost geometric. *J. London Math. Soc. (2)*, 17(3):555–565, 1978.

[40] Daniel S. Silver and Susan G. Williams. Mahler measure, links and homology growth. *Topology*, 41(5):979–991, 2002.

[41] William P. Thurston. The geometry and topology of three-manifolds. `http://www.msri.org/publications/books/gt3m/`, 1979.

[42] William P. Thurston. Three-dimensional manifolds, Kleinian groups and hyperbolic geometry. *Bull. Amer. Math. Soc. (N.S.)*, 6(3):357–381, 1982.

[43] William P. Thurston. A norm for the homology of 3-manifolds. *Mem. Amer. Math. Soc.*, 59(339):i–vi and 99–130, 1986.

[44] Dragomir Šarić. Complex fenchel-nielsen coordinates with small imaginary parts. *arXiv:math.GT/1204.5778*.

[45] Shicheng Wang. Non-zero degree maps between 3-manifolds. *Lectures in Tokyo Uinversity*, 2008.

[46] Daniel Wise. The structure of groups with a quasiconvex hierarchy. `http://www.math.mcgill.ca/wise/papers.html`, 2011.